Product datasheet

Specifications



inductive sensor XS7 26x26x13 - PBT - Sn10mm - 12..24VDC - M8

Local distributor code: 388783023 XS7E1A1PAM8

Main

Range of product	Telemecanique Inductive proximity sensors XS
Series name	General purpose
Sensor type	Inductive proximity sensor
Device application	-
Sensor name	XS7
Sensor design	Flat form 26 x 26 x 13
Size	13 mm
Body type	Fixed
Detector flush mounting acceptance	Flush mountable
Material	Plastic
Enclosure material	PBT
Type of output signal	Discrete
Wiring technique	3-wire
Discrete output function	1 NO
Output circuit type	DC
Discrete output type	PNP
Electrical connection	3 pins M8 male connector
[Us] rated supply voltage	12...24 V DC with reverse polarity protection
Switching capacity in mA	<= 100 mA DC with overload and short-circuit protection
IP degree of protection	IP67 conforming to IEC 60529

Complementary

Detection face	Frontal
Front material	PBT
Operating zone	0…8 mm
Differential travel	1...15% of Sr
Status LED	Output state: 1 LED (yellow)
Supply voltage limits	10…36 V DC

Disclaimer: This documentation is not intended as a substitute for and is not to be used for determining suitability or reliability of these products for specific user applications

Switching frequency	<= 1000 Hz
Maximum voltage drop	<2 V (closed)
Current consumption	<= 10 mA no-load
Maximum delay first up	10 ms
Maximum delay response	2 ms
Maximum delay recovery	6 ms
Marking	CE
Depth	13 mm
Height	26 mm
Width	26 mm
Net weight	0.04 kg

Environment

Product certifications	CSA Ecolab UL C-Tick
Ambient air temperature for operation	-25…70 °C
Ambient air temperature for storage	-40…85 °C
Vibration resistance	25 gn amplitude = +/- 2 mm (f = 10…55 Hz) conforming to IEC 60068-2-6
Shock resistance	50 gn for 11 ms conforming to IEC 60068-2-27

Packing Units

Unit Type of Package 1	PCE
Number of Units in Package 1	1
Package 1 Weight	31.0 g
Package 1 Height	4.2 cm
Package 1 width	9.6 cm
Package 1 Length	6.7 cm

Offer Sustainability

Sustainable offer status	Green Premium product
REACh Regulation	REACh Declaration
EU RoHS Directive	Pro-active compliance (Product out of EU RoHS legal scope) EU RoHS Declaration
Mercury free	Yes
RoHS exemption information	Yes
Environmental Disclosure	Product Environmental Profile

Contractual warranty

Warranty	18 months

Product datasheet XS7E1A1PAM8

Dimensions Drawings

Dimensions

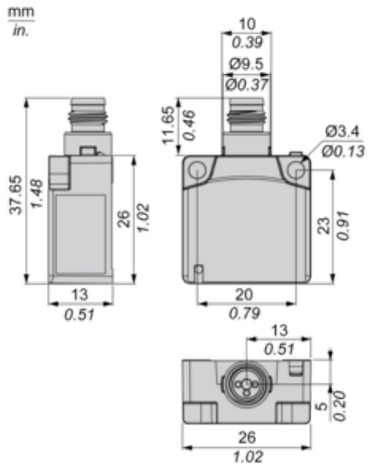

Product datasheet XS7E1A1PAM8

Mounting and Clearance

Setting-up

Minimum Mounting Distances (mm)

Side by Side

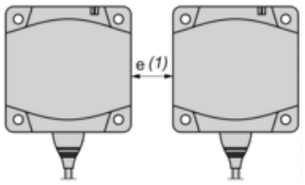

e (1) ≥ 30

Face to Face

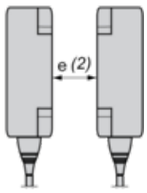

e (2) ≥ 72

Facing a Metal Object

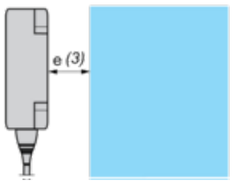

e (3) ≥ 30

Wiring Schemes

PNP

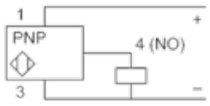

M8

