I7R201

Inductive ring sensor

I7R3010-FPKG/US-100-IPF

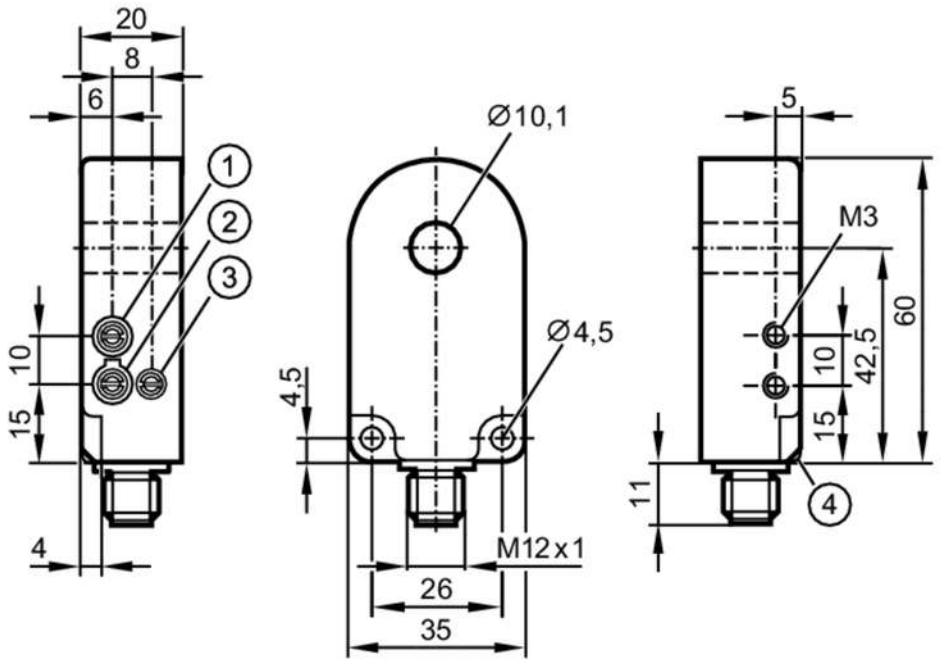

1 sensitivity
2 Output function
3 pulse stretching time

Product characteristics		
Electrical design		PNP
Output function		normally open / normally closed; (selectable)
Housing		circular
Dimensions	[mm]	60 x 35 x 20
Application		
Operating principle		static
Electrical data		
Operating voltage	[V]	10...35 DC
Current consumption	[mA]	< 11
Protection class		III
Reverse polarity protection		yes
Outputs		
Electrical design		PNP
Output function		normally open / normally closed; (selectable)
Max. voltage drop switching output DC	[V]	2
Permanent current rating of switching output DC	[mA]	200
Short-circuit protection		yes
Overload protection		yes

I7R201

Inductive ring sensor

I7R3010-FPKG/US-100-IPF

Detection zone			
Resolution of steel ball (diameter)	[mm]	1.5	
Max. part speed	[m/s]	35	
Response times			
Pulse stretching	[ms]	10...150	
Pulse stretching adjustable		yes	
Max. fall time	[ms]	10	
Response time	[ms]	< 0.5	
Operating conditions			
Ambient temperature	[°C]	-25...70	
Protection		IP 67	
Tests / approvals			
MTTF	[years]	658	
UL approval		Ta	-25...70 °C
		Enclosure type	Type 4X (indoor use only) / 12 and 13
		power supply	Class 2
		File number UL	E174191
Mechanical data			
Weight	[g]	60.7	
Housing		circular	
Dimensions	[mm]	60 x 35 x 20	
Inside diameter	[mm]	10.1	
Materials		housing: PA; ring: POM	
Displays / operating elements			
Display		switching status	1 x LED, yellow
Remarks			
Pack quantity		1 pcs.	

Electrical connection - plug

Connector: 1 x M12; coding: A

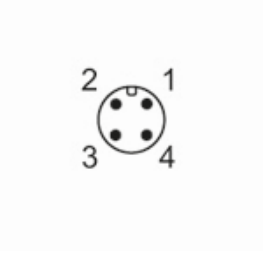

I7R201

Inductive ring sensor

I7R3010-FPKG/US-100-IPF

Connection

