## 22ECP35 Ultra EC™

Ø 22 mm • 2-pole • 55 W

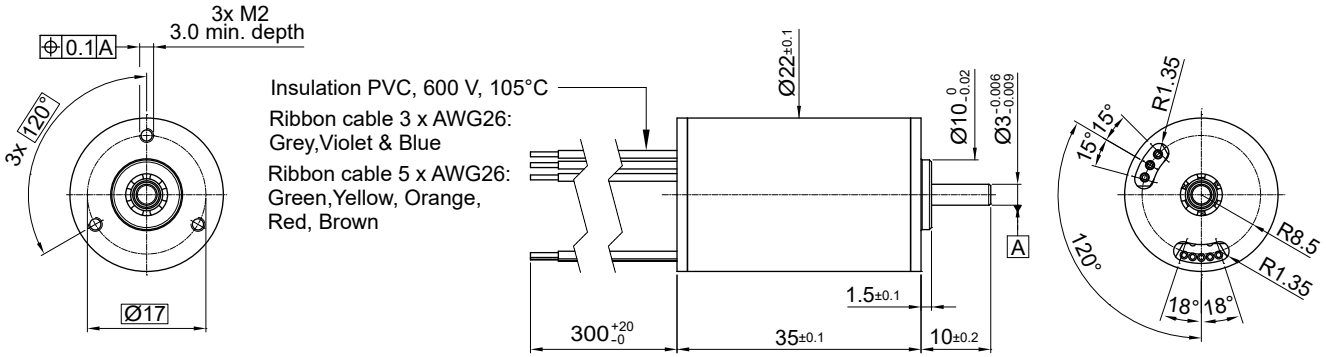


Dimensions in mm.

| Electrical Data | Symbol | 22ECP35 8B-184.01 | Unit |
|---|---|---|---|
| 1 Nominal Voltage | $U_N$ | 24 | Volt |
| 2 Optimization Direction | - | Symmetrical | - |
| 3 No Load Speed | $n_0$ | 13,200 | rpm |
| 4 Typical No Load Current | $I_0$ | 30.0 | mA |
| 5 Max. Continuous Mechanical Power (@25°C) | $P_{max}$ | 56.0 | W |
| 6 Max. Continuous Current | $I_{e\,max}$ | 0.8 | A |
| 7 Max. Continuous Torque | $M_{e\,max}$ | 14.3 (2.03) | mNm (oz-in) |
| 8 Back EMF Constant | $k_E$ | 1.82 | V/1000 rpm |
| 9 Torque Constant | $k_M$ | 17.4 | mNm/A |
| 10 Motor Regulation | $R/k^2$ | 21.8 | $10^3$/Nms |
| 11 Motor Regulation | $k/R^{½}$ | 6.77 (0.96) | mNm/$W^{½}$ (oz-in/$W^{½}$) |
| 12 Internal Resistance - phase to phase | $R_l$ | 6.58 | ohms |
| 13 Line to Line Resistance at Connectors | $R_L$ | 6.71 | ohms |
| 14 Inductance Phase to Phase | L | 0.89 | mH |
| 15 Mechanical Time Constant | $\tau_m$ | 3.0 | ms |
| 16 Electrical Time Constant | $\tau_e$ | 0.14 | ms |
| **General Data** | | | |
| 17 Maximum Motor Speed | $n_{max}$ | 50000 | rpm |
| 18 Ambient Working Temperature Range | - | -30 to + 100 (-22 to + 212) | °C (°F) |
| 19 Ambient Storage Temperature Range | - | -40 to + 100 (-40 to + 212) | °C (°F) |
| 20 Ball Bearings Preload | - | 5.50 | N |
| 21 Axial Static Force w/o Shaft Support (max) | - | 34.00 | N |
| 22 Maximum Winding Temperature | - | 125 (257) | °C (°F) |
| 23 Thermal Resistance | $R_{th}$ | 3.5/12.5 | °C/W |
| 24 Thermal Time Constant | $\tau_w$ | 550 | s |
| 25 Weight | - | 64 (2.26) | g (oz) |
| 26 Rotor Inertia | J | 1.38 | g-$cm^2$ |
| 27 Hall Sensor Electrical Phasing* | - | 120.00 | Electrical ° |

*Available without hall sensor

| Wire | Description |
|---|---|
| Gray | Phase 1 |
| Violet | Phase 2 |
| Blue | Phase 3 |
| Green | 3.5 to 24V DC |
| Yellow | GND |
| Orange | Sensor 1 |
| Red | Sensor 2 |
| Brown | Sensor 3 |
| **with hall effect sensor** | |

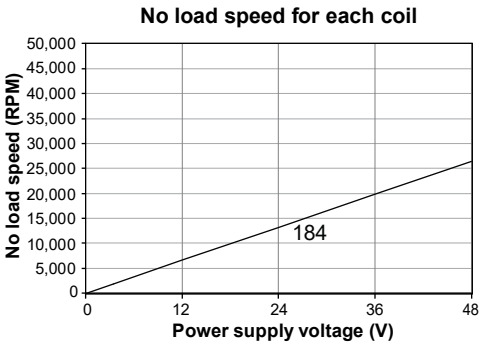


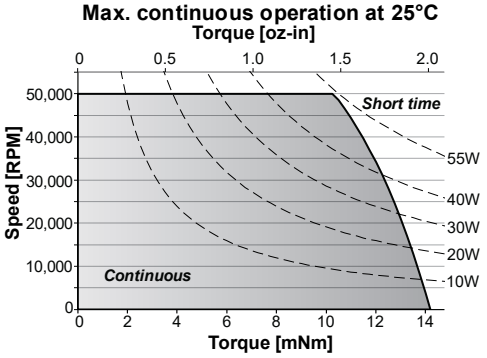




V012021 • © 2021 Portescap. Specifications subject to change without notice.