Datasheet

Pt100 Probe

SAIAT



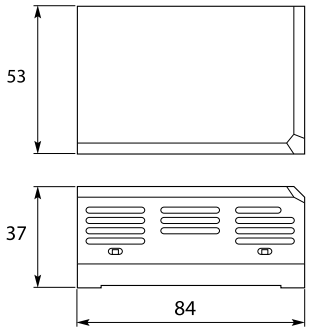

Part Number : SAIAT

Product Description : Room temperature sensor 1xPt100 class A output 4-20mA 0-50°C

Product Detail :

Room temperature sensor 1xPt100 class A DIN IEC 60751
Dry indoor use
Output 4-20 mA 0-50°C
Wall mounting, case ABS 84X53X37
Operating Temperature -20+80°C

SPECIFICATIONS

Attribut	Value
Sensor :	Pt100
Size :	84x53X37 mm
Température minimum détectée :	0°C
Température maximum détectée :	50°C
Connection type :	screwed terminals
Case material :	ABS
Process Connexion :	Wall mounting
Input cable size :	4 à 9mm
Interface	4-20mA 0-50°C
Numbers of wires :	3
Accuracy :	classe A

RTD SENSOR
Indoor



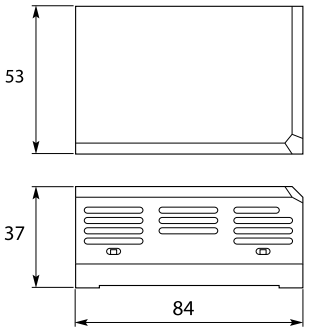

Other measurement scale on request

OPTIONS

- converter 4 to 20mA with scale 0-50°c (Other range on request)

Dry indoor use

Probe : Indoor Pt100 DIN IEC 60751 class A, single winding 3 wires (2 or 4 wires on request)

Case : ABS for wall mounting

Operating Temperature : -20/80°C

Option

Réf. **SAI** ☐

Transmitter 4-20 mA 2 wires (Scale : 0/50 °C) AT ☐

RTD SENSOR
Indoor



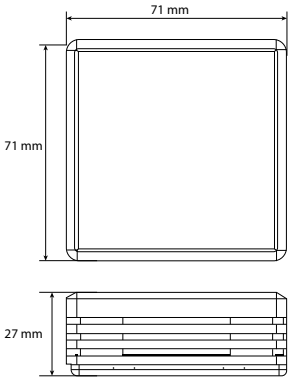

Other measurement scale on request

OPTIONS

- converter 4 to 20mA with scale 0-50°c (Other range on request)

Dry indoor use

Probe : Indoor PT100 class A connection 2, 3 or 4 wires on SAILS version

Output : 4-20mA 2 wires (scale 0-50°C) on SAILST version

Case : polypropylene - wall mounting

Operating Temperature : - 20°C/+80°C

Option

Ref. **SAILS** ☐

Transmitter 4-20 mA 2wires (scale : 0/50 °C) T ☐

Pt100, Pt1000 or Ni1000 Sensor
Room radiation



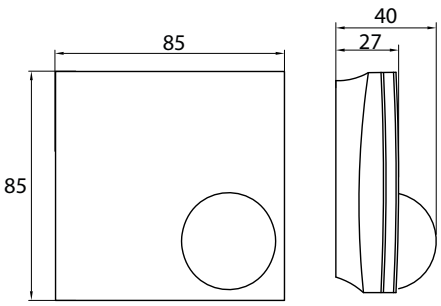

OPTIONS

- 3 or 4 wires on request

Réf. **SAIB** *PT100 - 2 ls class B*

Réf. **SAIBM** *PT1000 - 2wires class*

Réf. **SAIBN** *B NI1000 - 2 wires class B*

La sonde d'ambiance de rayonnement thermique détermine la proportion du rayonnement qui a un effet réel ou la chaleur rayonnante effective sur le lieu de mesure.

Measurement scale : - 30+75 °C

Connection type : 2 wires (4 wires Pt100)

Connection : screwed terminal

Case : ABS

Size : 85x85x27 mm (40 au niveau de la boule)

IP : 30