Daikin HVAC to BACnet/IP & MS/TP Application

Item number: IN770AIR00SO000

The Daikin application has been specially designed to allow bidirectional control and monitoring of Daikin HVAC (DIII-NET) from a BMS, SCADA, PLC, or any other device working as a BACnet/IP server or a BACnet MS/TP client. The solution allows the integration of up to 16 indoor units from a single interface.



Daikin to BACnet/IP & MS/TP - Up to 16 Indoor Units

Features and benefits

- **Compatible with any network**
  The interface supports both BACnet/IP and BACnet MS/TP protocols.
- **Reduce commissioning time**
  Scan the bus and find all the units connected to the HVAC system with their control signals, including outdoor unit indicators.
- **A gateway for any project's size**
  Choose the license that better fits your needs (XXS - 4 indoor units, S - 16 indoor units, M - 64 indoor units), or upgrade your current license. Your project's dimensions and your budget are covered.
- **Fast and intuitive project configuration**
  Intesis MAPS is the user-friendly, in-house-developed configuration tool that enables you to maximize the potential of Intesis gateways. Simply select your template and eliminate the need for tedious manual signal mapping.
- **Minimize the use of installation materials, reduce the installation work**
  The gateway is connected directly to the outdoor units' communication bus. One single gateway enables centralized access to the entire HVAC system.
- **Enable energy efficiency by controlling the building's main consuming asset**
  The gateway's Power Estimation Algorithm allows you to estimate the energy consumption of each indoor unit connected to the DIII-NET.
- **Avoid compatibility issues**
  This gateway is compatible with Daikin SKY Air, VRV, VRV Hydro Box, HRV and Air curtains.
- **Automatic updates will keep your product high performing**
  Both the Intesis MAPS configuration tool and the interface's firmware can receive automatic updates to improve the product's functionality.

Daikin HVAC to BACnet/IP & MS/TP Application



General

Net Width (mm)	106
Net Height (mm)	58
Net Depth (mm)	90
Net Weight (g)	240
Packed Width (mm)	13
Packed Height (mm)	8.5
Packed Depth (mm)	14
Packed Weight (g)	310
Operating Temperature °C Min	-10
Operating Temperature °C Max	60
Storage Temperature °C Min	-30
Storage Temperature °C Max	60
Power Consumption (W)	127
Input Voltage (V)	For DC: 12 .. 36 VDC ±10%, Max: 250 mA For AC: 24 VAC ±10 %, 50-60 Hz, Max: 127 mA Recommended voltage: 24 VDC, Max: 127 mA
Power Connector	3-pole
Configuration	Intesis MAPS
Capacity	Up to 16 indoor units and up to 10 outdoor units.
Installation Conditions	This gateway is designed to be mounted inside an enclosure. If the unit is mounted outside an enclosure, precautions should always be taken to prevent electrostatic discharge to the unit. When working inside an enclosure (e.g., making adjustments, setting switches, etc.), typical anti-static precautions should always be followed before touching the unit.
AC Model Compatibility	This gateway is compatible with Daikin SKY Air, VRV, VRV Hydro Box, HRV and Air curtains.

Daikin HVAC to BACnet/IP & MS/TP Application



General

Content of Delivery	Intesis Gateway, Installation Manual, USB Configuration cable.
Not Included (in delivery)	Power supply not included.
Mounting	DIN rail mount (bracket included), Wall mount
Housing Materials	Plastic
Packaging Material	Cardboard
Warranty (years)	3 years

Identification and Status

Product ID	IN770AIR00SO000_BAC_DAI
Country of Origin	Spain
HS Code	8517620000
Export Control Classification Number (ECCN)	EAR99

Physical Features

Connectors / Input / Output	Power supply, EIA-485, KNX, Ethernet, HVAC port, Binary inputs (dry contact), Console port USB.
LED Indicators	Gateway and communication status.
Push Buttons	Factory reset. I-Am message (for BACnet only).
DIP & Rotary Switches	EIA-485 serial port configuration.
Battery Description	Manganese Dioxide Lithium button battery.

Certifications and Standards

ETIM Classification	EC001604
WEEE Category	IT and telecommunications equipment

Use Case

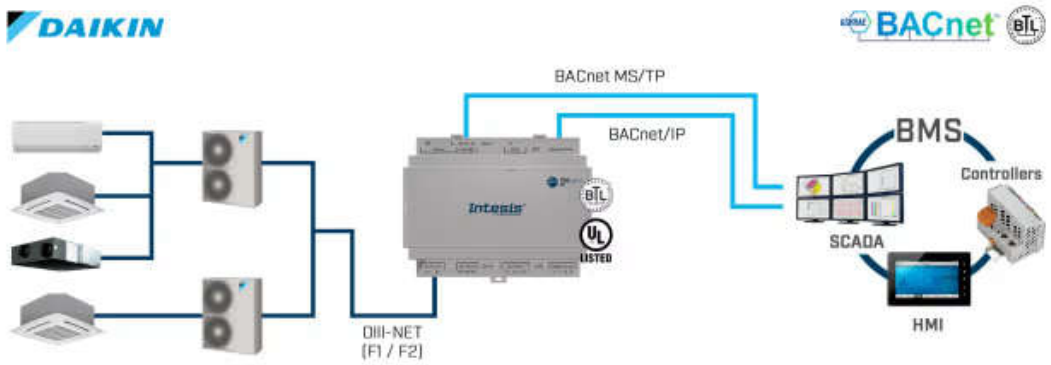

Integration example.



Use Intesis MAPS to change the protocol: BACnet, Modbus, KNX, or Home Automation