PM1515

Flush pressure sensor

PM-006-REA12-A-ZVG/US

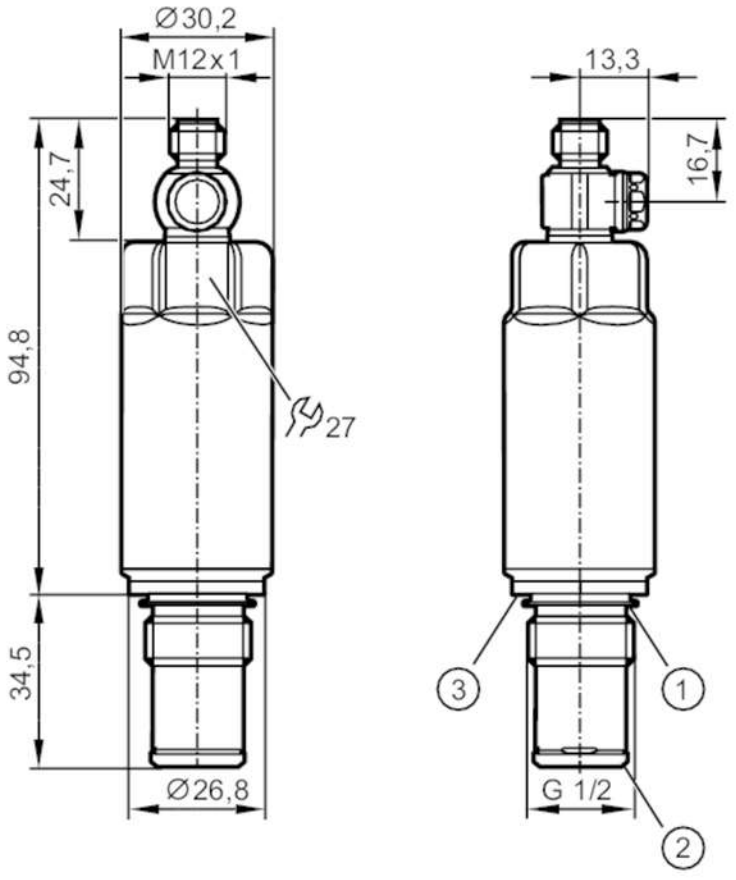

1 Gasket FKM (for sealing on the back - not pressure resistant) / removable
2 pre-mounted PEEK sealing ring (removable) / metallic sealing area
3 groove for sealing ring DIN EN ISO 1179-2

3A ACS CE CRN cULus LISTED EC 1935/2004 EHEDG Certified FCM FDA IO-Link Reg31 UKCA

Product characteristics				
Number of inputs and outputs		Number of digital outputs: 1; Number of analogue outputs: 1		
Measuring range		-1...6 bar	-14.5...87 psi	-100...600 kPa
Process connection		threaded connection G 1/2 external thread sealing cone		
Application				
Special feature		Gold-plated contacts		
Measuring element		ceramic-capacitive pressure measuring cell		
Temperature monitoring		yes		
Application		flush mountable for the food and beverage industry		
Media		viscous media and liquids with suspended particles; liquids and gases		
Conditionally suitable for		use in gases at pressures > 25 bar only on request		
Medium temperature	[°C]	-25...150		
Min. bursting pressure		120 bar	1740 psi	12000 kPa
Pressure rating		50 bar	725 psi	5000 kPa
Vacuum resistance	[mbar]	-1000		
Type of pressure		relative pressure; vacuum		
No dead space		yes		

PM1515

Flush pressure sensor

PM-006-REA12-A-ZVG/US

MAWP (for applications according to CRN)	[bar]	43		
Electrical data				
Operating voltage	[V]	18...30 DC		
Min. insulation resistance	[MΩ]	100; (500 V DC)		
Protection class		III		
Reverse polarity protection		yes		
Integrated watchdog		yes		
2-wire				
Current consumption	[mA]	3.5...21.5		
Power-on delay time	[s]	< 1		
3-wire				
Current consumption	[mA]	< 45		
Power-on delay time	[s]	< 0.5		
Inputs / outputs				
Number of inputs and outputs		Number of digital outputs: 1; Number of analogue outputs: 1		
Outputs				
Total number of outputs		2		
Output signal		analogue signal; IO-Link; (configurable)		
Number of digital outputs		1; (IO-Link)		
Number of analogue outputs		1		
Analogue current output	[mA]	4...20; (scalable; 1:5)		
Max. load	[Ω]	700; (Ub = 24 V; (Ub - 9 V) / 21.5 mA)		
Short-circuit proof		yes		
Overload protection		yes		
Measuring/setting range				
Measuring range		-1...6 bar	-14.5...87 psi	-100...600 kPa
Analogue start point		-1...4.8 bar	-14.5...69.6 psi	-100...480 kPa
Analogue end point		0.2...6 bar	2.9...87 psi	-20...600 kPa
In steps of		0.002 bar	0.05 psi	0.2 kPa
Factory setting		ASP = 0.0 bar	AEP = 6.0 bar	
Temperature monitoring				
Measuring range		-25...150 °C	-13...302 °F	
Accuracy / deviations				
Repeatability	[% of the span]	< ± 0,1; (with temperature fluctuations < 10 K; Turn down 1:1)		
Characteristics deviation	[% of the span]	< ± 0,5; (linearity incl. hysteresis and repeatability, limit value setting to DIN EN IEC 62828-1)		
Linearity deviation	[% of the span]	< ± 0,15; (Turn down 1:1)		
Hysteresis deviation	[% of the span]	< ± 0,15; (Turn down 1:1)		
Long-term stability	[% of the span]	< ± 0,1; (Turn down 1:1; per year)		

PM1515

Flush pressure sensor

PM-006-REA12-A-ZVG/US

Total deviation over temperature range		**Temperature range**	**total deviation**
		-25...15 °C	Characteristics deviation ± 0,05 % of the span / 10 K
		15...80 °C	Characteristics deviation
		80...150 °C	Characteristics deviation ± 0,1 % of the span / 10 K
Notes on the accuracy / deviation		for further details see section Diagrams and graphs	
Temperature monitoring			
Accuracy	[K]	± 2.5 K + (0.045 x (ambient temperature - medium temperature))	
Repeatability	[K]	± 0,2	
Resolution	[K]	0.2	
Response times			
Damping for the analogue output dAA	[s]	0...4	
2-wire			
Step response time analogue output	[ms]	30	
3-wire			
Step response time analogue output	[ms]	7	
Temperature monitoring			
Dynamic response T05 / T09	[s]	< 10 / < 25; (DIN EN 60751 water; > 0,9 m/s)	
Interfaces			
Communication interface		IO-Link	
Transmission type		COM2 (38,4 kBaud)	
IO-Link revision		1.1	
SDCI standard		IEC 61131-9	
Profiles		Smart Sensor ED2: Identification and Diagnosis (0x4000), Measurement Data Channel (0x800A)	
SIO mode		no	
Required master port type		A; (when pin 2 not connected: B)	
Min. process cycle time	[ms]	4.5	
IO-Link resolution pressure	[bar]	0.002	
IO-Link resolution temperature	[K]	0.2	
IO-Link process data (cyclical)		**function**	**bit length**
		pressure	16
		temperature	16
		device status	4
IO-Link functions (acyclical)		application specific tag; internal temperature	
Supported DeviceIDs		**Type of operation**	**DeviceID**
		default	1022
Operating conditions			
Ambient temperature	[°C]	-25...80	
Storage temperature	[°C]	-40...100	
Protection		IP 67; IP 68; IP 69K	

PM1515

Flush pressure sensor

PM-006-REA12-A-ZVG/US

Tests / approvals			
EMC		DIN EN 61326-1	
Shock resistance		DIN EN 60068-2-27	50 g (11 ms)
Vibration resistance		DIN EN 60068-2-6	20 g (10...2000 Hz)
MTTF	[years]	322	
UL approval		UL Approval no.	J024
		File number UL	E174189

Mechanical data		
Weight	[g]	309.6
Housing		cylindrical
Dimensions	[mm]	Ø 30.2 / L = 129.3
Materials		stainless steel (316L/1.4404); PTFE; FKM
Materials (wetted parts)		ceramics (99.9 % Al2O3); stainless steel (316L/1.4435); surface characteristics: Ra < 0,4 / Rz 4; PEEK; PTFE
Min. pressure cycles		100 million
Tightening torque	[Nm]	20
Process connection		threaded connection G 1/2 external thread sealing cone

Remarks	
Pack quantity	1 pcs.

Electrical connection

Connector: 1 x M12; coding: A; Contacts: gold-plated



Connection

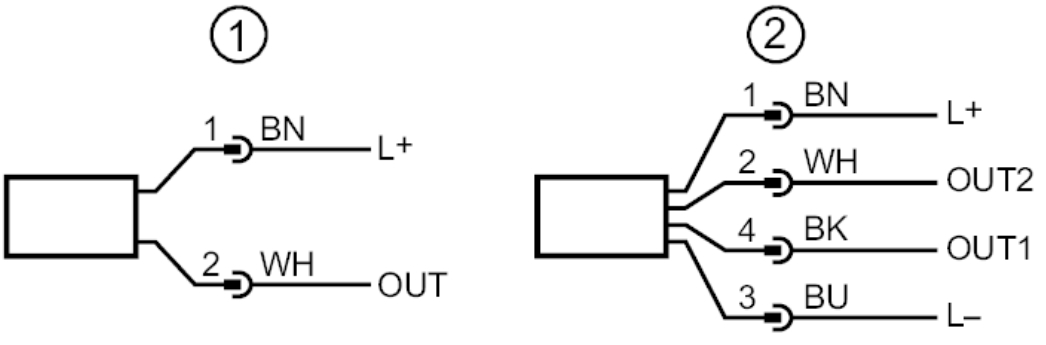

1	connection for 2-wire operation (analogue)
2	connection for 3-wire operation (analogue / IO-Link) OUT1: IO-Link OUT2: analogue output

PM1515

Flush pressure sensor

PM-006-REA12-A-ZVG/US

Diagrams and graphs

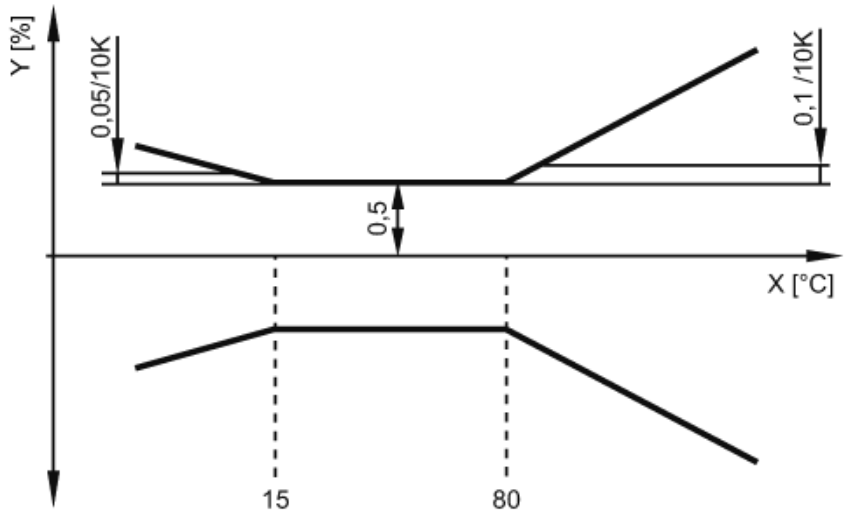

X temperature

Y total deviation