ROLINE LCD/TV Wall Mount, 5 Joints

Product No.	17.03.1169
Manufacturer	ROLINE
Manufacturer No.	17.03.1169
EAN (single piece)	7611990149681



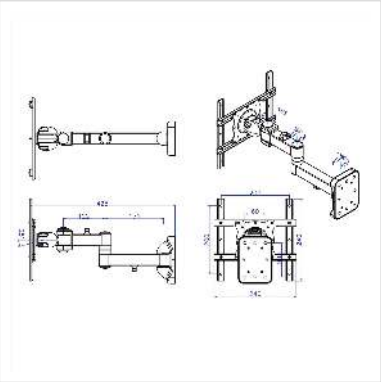



- Arm length: up to 425 mm
- Max. load: 25 kg
- Mounts your screen to the wall and monitor can be tilted ,swiveded and rotated
- Meets VESA 75 x 75 mm, VESA 100 x 100 mm, VESA 100 x 200 mm, VESA 200 x 200 mm
- Colour: black

Technical specifications	
Manufacturer	ROLINE
Product group	LCD-Monitor arms
Product type	Monitor Arms, wall mount
Colour	black
Scope of delivery	supporting arm, mounting screws, 6 mm hex wrench, manual, cable clips
Maximum weight capacity	25 kg
Quantity of pivots	5
Fixing	Wandbefestigung
Maximal arm length	425mm
Adjustments	Adjustable spring gauge
Number of monitors	1

VESA 75 x 75 mm	yes
VESA 100 x 100 mm	yes
VESA 200 x 100 mm	yes
VESA 200 x 200 mm	yes
Material group	metal
Height	240 mm
Width	240 mm
Depth	425 mm
Weight	3295 g
Height of packaging (single piece)	125 mm
Width of packaging (single piece)	145 mm
Depth of packaging (single piece)	460 mm
Package weight (single piece)	3.7 kg