Brand of NTN Group

Technical data

EXFLZ205

Bearing units



Grey cast housing, radial insert ball bearing with eccentric locking collar, seal with slinger

KIT CONTENT

EX205G2, FLZ205

VISUAL (S)

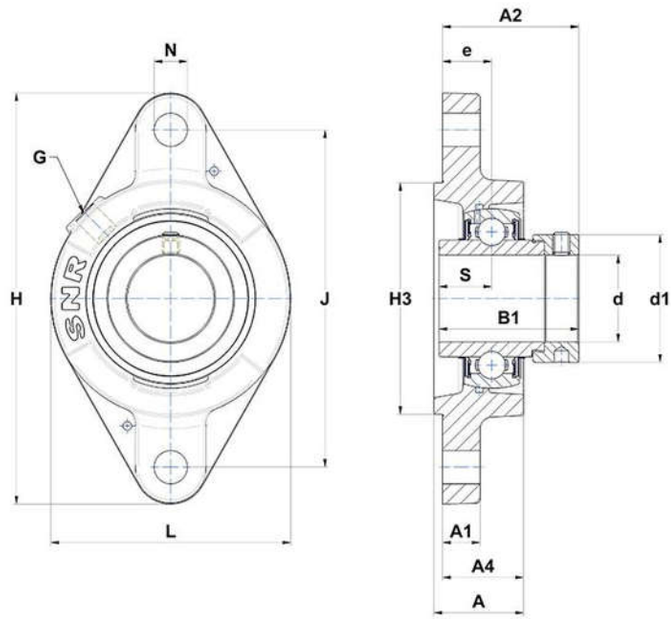

PRODUCT DEFINITION

Brand	SNR
A - Housing height	32,5 mm
A1 - Housing foot height / flange height	12 mm
A2 - Total height from mounting surface	45,9 mm
A4 - Housing height from mounting surface	29 mm
B - Width of Inner Ring	34,8 mm

EXFLZ205
Bearing units

PRODUCT DEFINITION	
B1 - Overall width Inner Ring	44,3 mm
d - Shaft diameter	25 mm
d1 - Outer dia of eccent. Lock. collar / nut of adapter sleeve	37,4 mm
e - Distance mounting surface to bearing center	19 mm
G - Grease fitting	R1/8"
H - Housing length, width or diameter	124 mm
H3 - Centering dia	60 mm
J - Mounting holes distance	99 mm
L - Housing width / diameter	70 mm
N - Mounting hole dimension	11,5 mm
S - Distance front side/bearing centre	17,4 mm

PRODUCT PERFORMANCE	
C - Dynamic load rating	14000000 mN
C0 - Static load rating	7880000 mN
Operating temperature min.	253,15 °K
Operating temperature max.	373,15 °K

OTHER FEATURES	
Mass	0,75 kg
Recommended tightening torque for set screw	5.5 N-m