182.72.104.66222..-E1Pendelrollenlager

Spherical roller bearings

22207-E1-XL (Series 222..-E1)

main dimensions to DIN 635-2

The datasheet is only an overview of dimensions and basic load ratings of the selected product. Please always observe all the guidelines in these overview pages. Further information is given on many products under the menu item "Description". You can also order comprehensive information via the Catalogue selection system (https://www.schaeffler.de/content.schaeffler.de/en/news_media/index.jsp) or by telephone on +49 (91 32) 82 - 28 97.

d	35	mm	
D	72	mm	
B	23	mm	
D_1	62,5	mm	
d_2	43,9	mm	
$D_{a\ max}$	65	mm	
$d_{a\ min}$	42	mm	
d_s	3,2	mm	
n_s	4,8	mm	
$r_{a\ max}$	1	mm	
r_{min}	1,1	mm	
m	0,434	kg	Mass
C_r	89000	N	Basic dynamic load rating, radial
C_{0r}	81000	N	Basic static load rating, radial
e	0,31		
Y_1	2,21		
Y_2	3,29		
Y_0	2,16		
n_G	10700	1/min	Limiting speed
n_B	7000	1/min	Reference speed
C_{ur}	9400	N	Fatigue limit load, radial

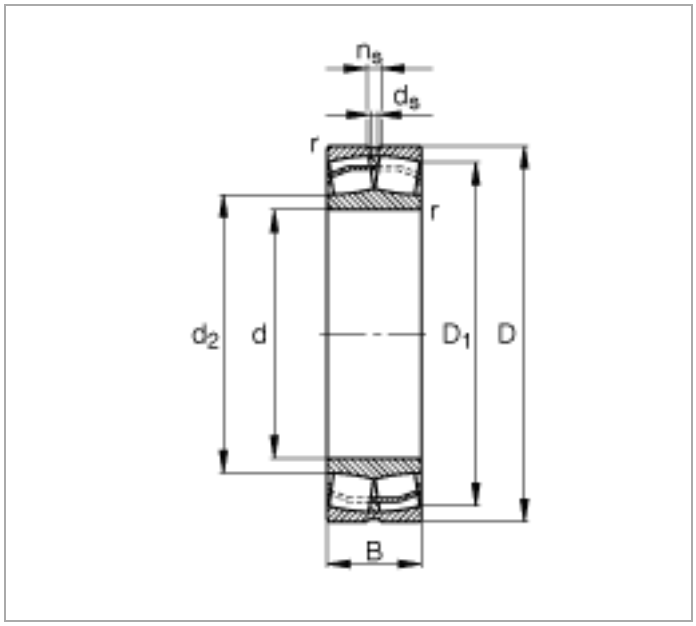
n_s
d_s
r
r
d_2
d
D_1
D
B

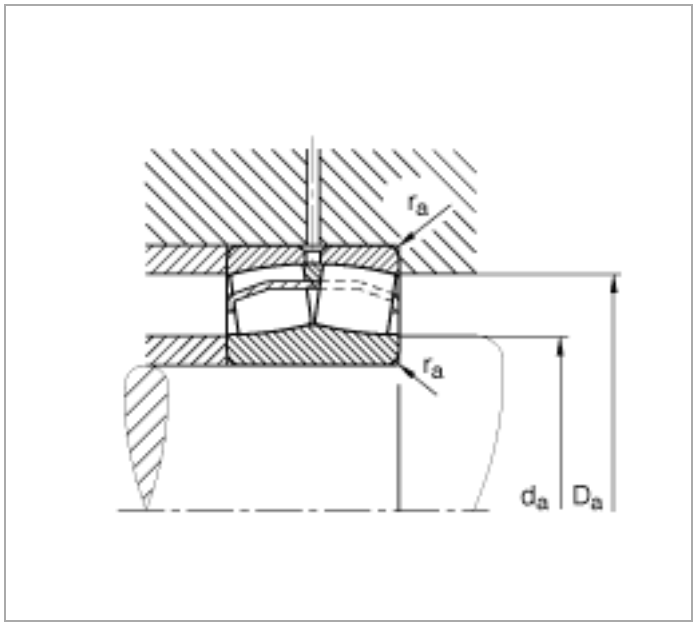
r_a
r_a
d_a
D_a