TG series

Subminiature slide switches



DISTINCTIVE FEATURES

Single piece case
Epoxy sealed terminals
Washable version available
Wide variety of contact materials
Same PCB layout as TL, TP and TR subminiature series



ELECTRICAL SPECIFICATIONS

- Current/voltage rating with resistive load :
  - Gold plated contacts : 0.4 VA 20V max. AC or DC
  - Silver plated contacts : 0.5 A 48V max. AC or DC
- Contact resistance : 20 mΩ max.
- Insulation resistance : 1,000 MΩ min. at 500 VDC
- Dielectric strength :
  1,000 Vrms 50 Hz min. between terminals and frame
  500 Vrms 50 Hz min. between terminals
- Electrical life at full load :
  2 position switches : 60,000 cycles
  3 position switches : 30,000 cycles

GENERAL SPECIFICATIONS

- Travel : 2.60 mm (.102)
- Wave soldering : 260 °C (500 °F) - 5 sec. max.
- Operating temperature : -30 °C to +85 °C (-22 °F to +185 °F)
- Cleaning : solvents or water + detergent

MATERIALS

- Case : flame retardant thermoplastic
- Actuator : thermoplastic
- Ground plate and bracket : brass, tin plated
- Contacts and terminals : see next page
- Rubber seal : silicone, transparent
- Terminal seal : epoxy

APEM products may be recycled at end-of-life for the re-claiming of valuable metal components.

The company reserves the right to change specifications without notice.

TG series

Subminiature slide switches

PCB MOUNTING

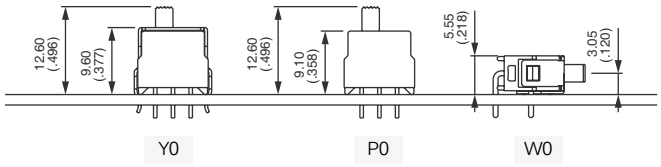

ELECTRICAL FUNCTIONS

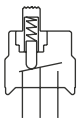

TG series

Subminiature slide switches

BUILD YOUR PART NUMBER

BASIC PART NUMBER

TG	___	___	___
SERIES	NUMBER OF POLES	ELECTRICAL FUNCTIONS	TERMINALS

NUMBER OF POLES

3	Single pole

ELECTRICAL FUNCTIONS

6	ON	-	ON
9	ON	OFF	ON

TERMINALS

P0	Straight PC
Y0	Straight PC, bracket mounting
W0	Right angle, horizontal mounting
MW	Wire-wrap

OPTIONS

___	___	___
CONTACT AND TERMINAL MATERIALS	ACTUATORS	MODEL

CONTACT AND TERMINAL MATERIALS

0	Brass, gold plated (std)
1	Brass, silver plated
3	Brass, gold plated (1.27 µ gold)
8	Contact brass, gold plated + tin plated terminals
9	Contact brass, gold plated (1.27 µ gold) + tin plated term.

ACTUATORS

00	High (standard)
10	Flush

MODEL

00	Standard
50	Washable

ABOUT THIS SERIES

On the following pages, you will find successively basic part numbers of switches and options in the same order as in above chart.

Notice : please note that not all combinations of above numbers are available. Refer to the following pages for further information.

TG series

Subminiature slide switches

STRAIGHT PC TERMINALS
STANDARD MODEL



TG36P0••00	ON	-	ON
TG39P0••00	ON	OFF	ON

Shown with standard actuator

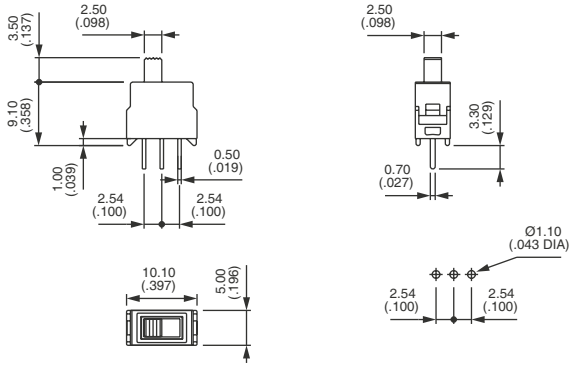

STRAIGHT PC TERMINALS
WASHABLE MODEL



TG36P0••50	ON	-	ON
TG39P0••50	ON	OFF	ON

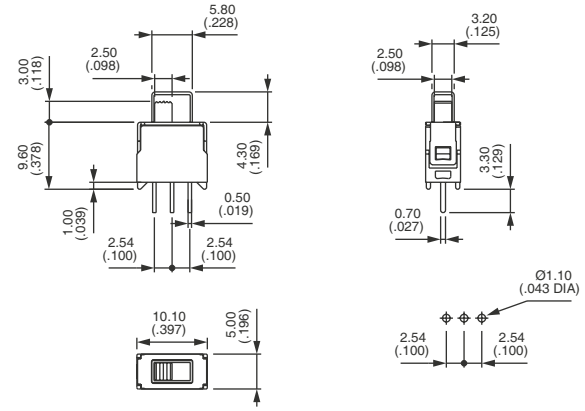

STRAIGHT PC TERMINALS
BRACKET MOUNTING - STANDARD MODEL



TG36Y0••00	ON	-	ON
TG39Y0••00	ON	OFF	ON

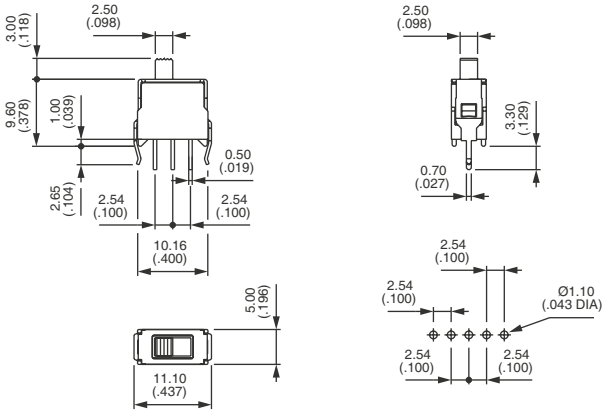

STRAIGHT PC TERMINALS
BRACKET MOUNTING - WASHABLE MODEL



TG36Y0••50	ON	-	ON
TG39Y0••50	ON	OFF	ON

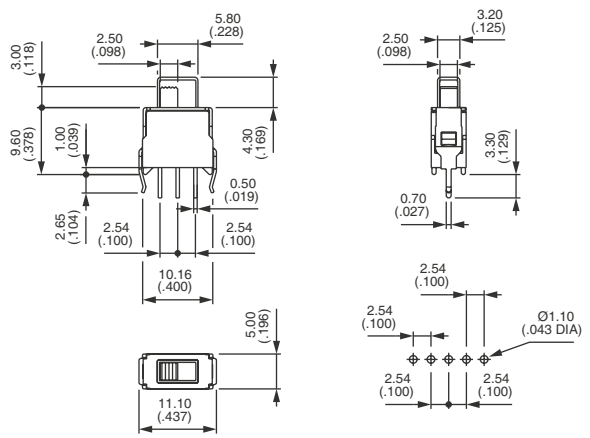

TG series

Subminiature slide switches

RIGHT ANGLE TERMINALS
HORIZONTAL MOUNTING - STANDARD MODEL



TG36W0••00	ON	-	ON
TG39W0••00	ON	OFF	ON

Shown with standard actuator

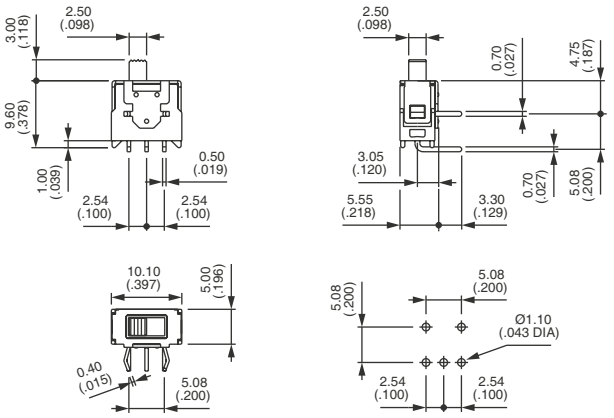

RIGHT ANGLE TERMINALS
HORIZONTAL MOUNTING - WASHABLE MODEL



TG36W0••50	ON	-	ON
TG39W0••50	ON	OFF	ON

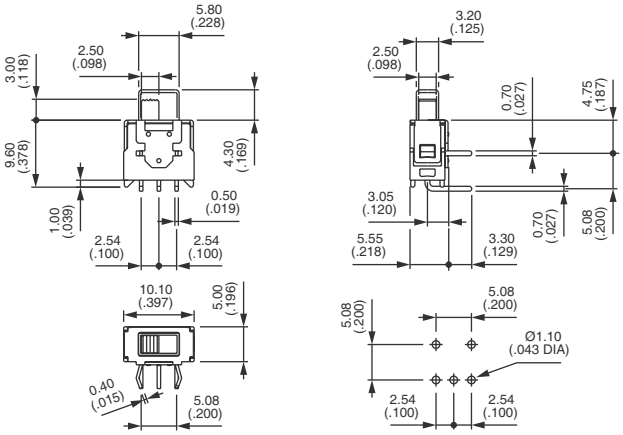

CONTACT AND TERMINAL MATERIALS

BASIC P/N ..... [ ] ..... [ ] ..... 00 or 50

To order a product, replace first • of the part number with one of the following codes.

0	Brass, gold plated (standard)
1	Brass, silver plated
3	Brass, gold plated (1.27 µ gold)
8	Contact brass, gold plated + tin plated terminals
9	Contact brass, gold plated (1.27 µ gold) + tin plated terminals

ACTUATORS

BASIC P/N ..... [ ] ..... [ ] ..... 00 or 50

To order a product, replace second • of the part number with one of the following codes.

00	High actuator (standard)
10	Flush actuator