IGC223

Inductive sensor

IGK2012-FRKG/2LED/US-104

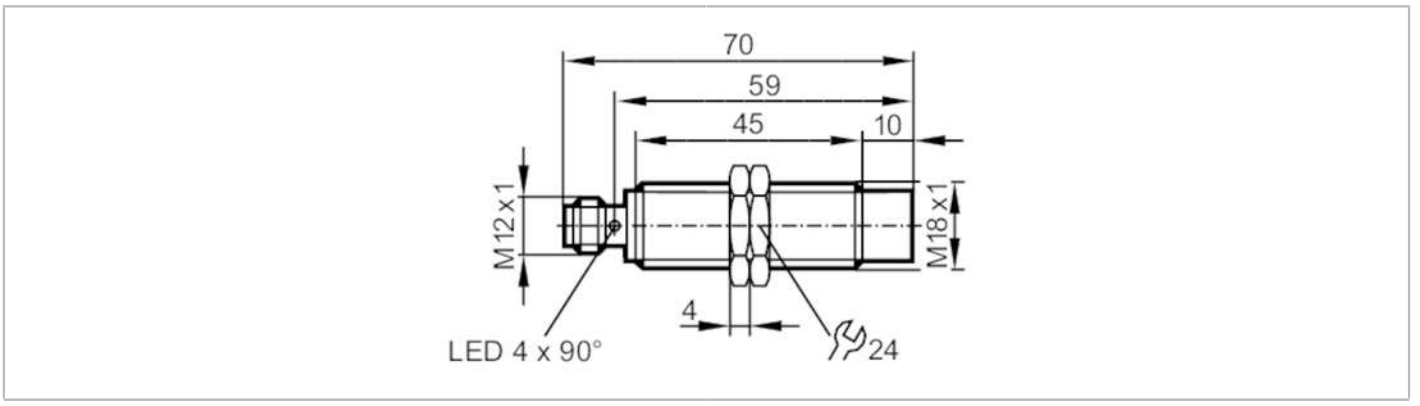

Product characteristics		
Electrical design		PNP/NPN
Output function		normally open / normally closed; (selectable)
Sensing range	[mm]	12
Housing		threaded type
Dimensions	[mm]	M18 x 1 / L = 70
Application		
Special feature		Gold-plated contacts; Increased sensing range; Optical setting aid
Application		Use in machine tools, coolants and lubricants
Electrical data		
Operating voltage	[V]	10...30 DC
Protection class		II
Reverse polarity protection		yes
Outputs		
Electrical design		PNP/NPN
Output function		normally open / normally closed; (selectable)
Max. voltage drop switching output DC	[V]	4.6
Minimum load current	[mA]	4
Max. leakage current	[mA]	1
Permanent current rating of switching output DC	[mA]	100
Switching frequency DC	[Hz]	300
Short-circuit protection		yes
Type of short-circuit protection		pulsed
Overload protection		yes
Detection zone		
Sensing range	[mm]	12
Real sensing range Sr	[mm]	12 ± 10 %
Operating distance	[mm]	0...9.7
Increased sensing range		yes

IGC223

Inductive sensor

IGK2012-FRKG/2LED/US-104

Accuracy / deviations			
Correction factor		steel: 1 / stainless steel: 0.7 / brass: 0.5 / aluminium: 0.5 / copper: 0.4	
Hysteresis	[% of Sr]	3...15	
Switch point drift	[% of Sr]	-10...10	
Operating conditions			
Ambient temperature	[°C]	-25...70	
Protection		IP 68; ("Coolant")	
Tests / approvals			
EMC		EN 61000-4-2 ESD	4 kV CD / 8 kV AD
		EN 61000-4-3 HF radiated	10 V/m
		EN 61000-4-4 Burst	2 kV
		EN 61000-4-6 HF conducted	10 V
		EN 55011	class B
MTTF	[years]	1424	
Mechanical data			
Weight	[g]	52.8	
Housing		threaded type	
Mounting		non-flush mountable	
Dimensions	[mm]	M18 x 1 / L = 70	
Thread designation		M18 x 1	
Materials		housing: brass white bronze coated; sensing face: LCP white; LED window: PEI; lock nuts: brass white bronze coated	
Tightening torque	[Nm]	25	
Displays / operating elements			
Display		switching status	4 x 90° LED, yellow
		setting aid	1 x LED, red
Optical setting aid		yes	
Accessories			
Items supplied		lock nuts: 2	
Remarks			
Pack quantity		1 pcs.	

Electrical connection - plug

Connector: 1 x M12; coding: A; Contacts: gold-plated

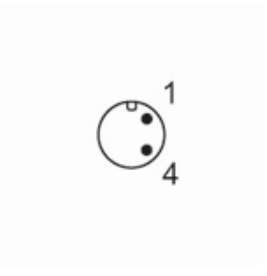

IGC223

Inductive sensor

IGK2012-FRKG/2LED/US-104

Connection

