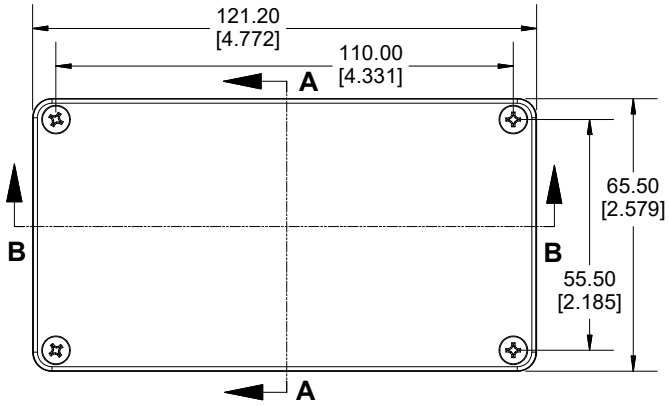


TOP VIEW

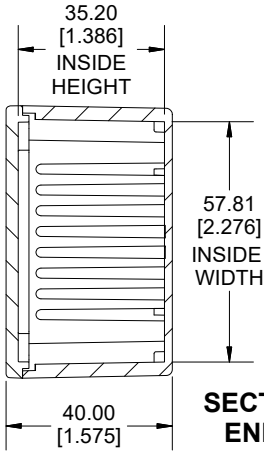


SECTION A-A
END VIEW

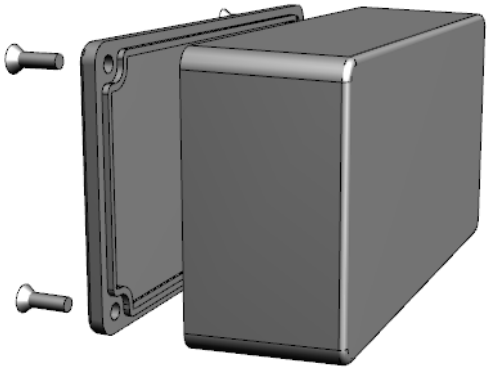

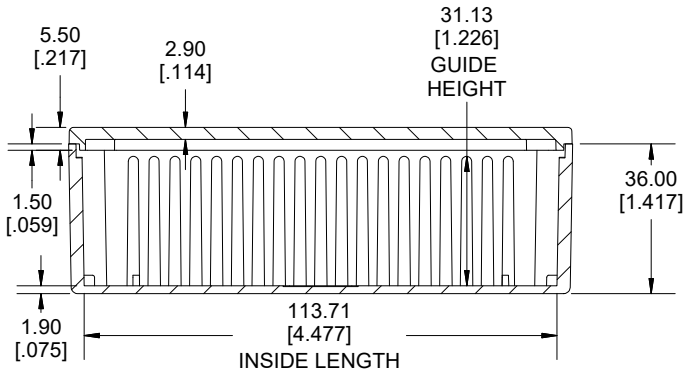


SECTION B-B
SIDE VIEW

DETAIL C

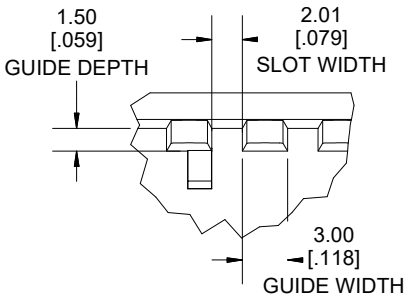


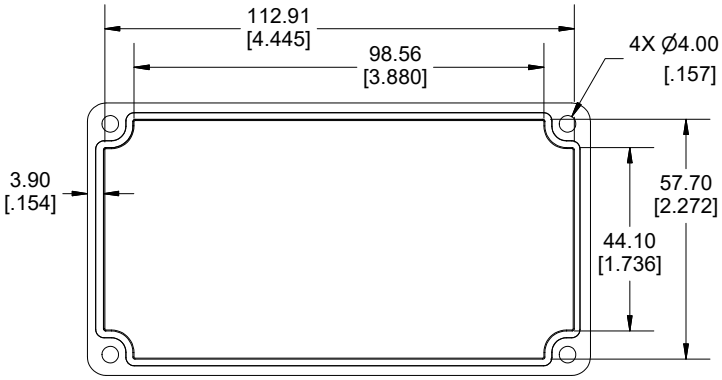


INSIDE LID

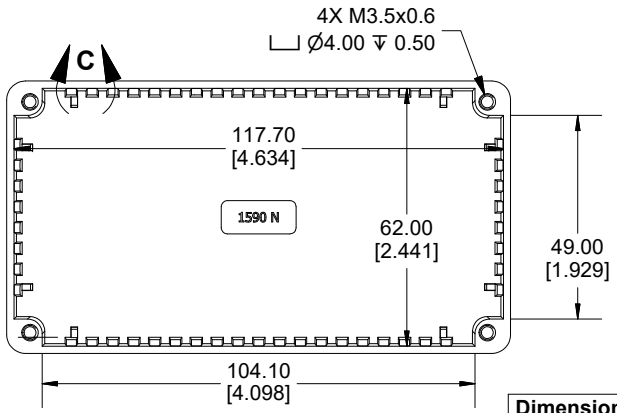


INSIDE BOX

**Dimensions:**
mm
[inches]

Enclosures can be Factory Modified (Milling, Drilling, Printing etc.)
Contact Factory (modshop@hammfg.com) for quotes
Solid models of this enclosure available in .stp or .x_t
(Part number and text placement/orientation on our products are subject to change, we do not recommend using them as a locating reference for modification purposes)

| NOTE |
|---|
| Purchased assembly includes box, lid and 4 cover screws. |
| Box and lid are made from Diecast Aluminum Alloy. |
| Silicone Gasket supplied with liquid resistant enclosure. |
| **Recommended Torque: 50-55 cN.m [71-78 ozf.in]** |
| **Recommended Torque with Gasket : 25-30 cN.m [36-43 ozf.in]** |

| PART NUMBERS | |
|---|---|
| **1590N Enclosure** | |
| Natural Finish Enclosure | 1590N |
| Black Textured Enclosure | 1590NBK |
| **1590N Liquid Resistant Enclosure (Silicone Gasket)** | |
| Natural Finish Enclosure | 1590WN |
| Black Textured Enclosure | 1590WNBK |
| **ACCESSORIES** | |
| **Liquid Resistant Cover Screws** | |
| Stainless Steel Cover Screws (Pkg 100) [M3.5 x 12mm, With O-Ring] | 1550WMS100 |
| Black Stainless Steel Cover Screws (Pkg 100) [M3.5 x 12mm, With O-Ring] | 1550WMS100BK |
| **Standard Cover Screws** | |
| Plated Cover Screws (Pkg 100) [M3.5 x 12mm] | 1550MS100 |
| Black Cover Screws (Pkg 100) [M3.5 x 12mm] | 1550MS100BK |

HAMMOND MANUFACTURING®

# 1590N

www.hammondmfg.com

REV:25.05.2020