MSM LA CS 22

Metal Switch, Latching Action, Switching Voltage up to 125 VDC / 250 VAC

new







Newly available with bright illumination

RoHS COMPLIANT

Description

- Switch available in version: Standard (ST), with Lettering (LE), with area illumination (AI)
- Available with bright illumination
- Available with 12 A and 16 A switching current
- Assembly by mounting with nut and subsequent clipping of the switching element
- Equipped with flat-pin plugs to permit fast connection

Standards

- DIN EN 61058-1
- UL 1054

Approvals

- Low Voltage Directive 2014/35/EU: Low Voltage Directive 2014/35/EU
- KEMA / ENEC File Number (Marquardt): 2181991.01
- UL / CSA File Number (Marquardt): E41791

Characteristics

- Housing material: high-quality stainless steel, actuator material: highly durable ceramic
- with or without surface backlighting in different colours
- Switching voltage up to 125 VDC respectively 250 VAC, switching current up to 16 A
- available with single-pole and double-pole switching system, switching status is easy to discern by looking at or feeling the resting position of the actuator
- for use in harsh environments

References

Alternative: switch with latching function: MSM LA CS 19
Alternative: Standard version MSM LA CS 19; MSM 16; MSM 27
Alternative: switch with backlighted illumination: MSM CS 19; MSM CS 22; MSM LA CS 19
Alternative: Other diameter

Weblinks

html-datasheet, General Product Information, CE declaration of conformity, RoHS, CHINA-RoHS, CAD-Drawings, Product News, Detailed request for product

Technical Data

Electrical Data	
Switching Function	N.O.
Number of Poles	1-pole and 2-pole
Supply Voltage	24 VDC Surface backlighting
Impulse Withstand Voltage (ESD)	4 kV MSM LA CS ST
Switching Voltage	max. 250 VAC, 30 VDC (125 VDC at 0.5 A)
Switching Current	12 A AC / 16 A AC
Rated Switching Capacity	3000 W
Lifetime	0.05 million actuations (250 VAC / 8 A), 0.1 million actuations (125 VDC / 0,5 A), 0.02 million actuations (250 VAC / 16 A)
Contact Resistance	< 100 mΩ (12 VDC / 1 A)
Insulation Resistance	> 100 MΩ 500 VDC
Mechanical Data	
Actuating Force	10 N
Actuating Travel	5.2 mm,
Lifetime	0.1 million actuations
Contact Gap	3 mm
Shock Protection	IK 07
Tightening Torque Plastic Nut	4.5 Nm for thread M19, 3.5 Nm for M22
Tightening Torque Stainless Steel Nut	12 Nm for thread M19, 16 Nm for M22

Climatical Data	
Operating Temperature	-20 to +85 °C
Storage Temperature	-20 to +85 °C
IP-Protection	IP 64 Front Side Contact Area, IP 40 Front Side mechanical, IP 00 Rear Side
Salt Spray Test (acc. to DIN 50021-SS)	24 h / 48 h / 96 h Residence Time
Material	
Housings	Stainless Steel
Actuator (disc, outside housing)	Ceramic
Gasket	NBR70
Switcher Collet	PA66 (UL94-V0 related to d ≥ 1.6 mm)
Intermediate Connector	PA66 (UL94-V0 related to d ≥ 1.6 mm)
Contact Pin Adapter	PA66 (UL94-V0 related to d ≥ 1.6 mm)

Dimension

MSM 22 LA CS ST / double-pole

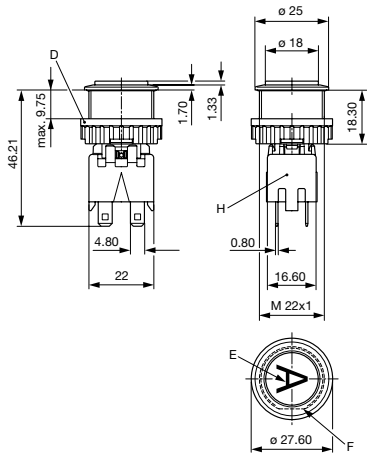

MSM 22 LA CS AI / double-pole

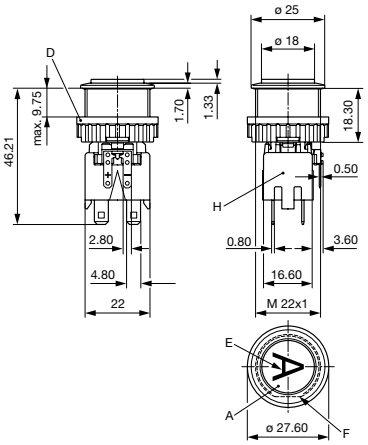

Switching Element single-pole with Push Button Holder

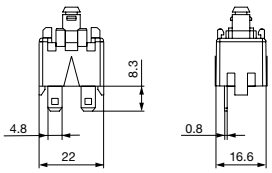

Legend
A = Illumination Area
C = Width Across Flats
D = Knurled Nut
E = Lettering
F = Anti-Rotation
H = Switching Element

Dimension

MSM 22 LA CS (without torsion protection)

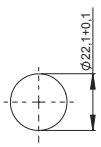

Drilling diagram

MSM 22 LA CS (with torsion protection)

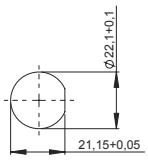

Drilling diagram

Assembly Instructions

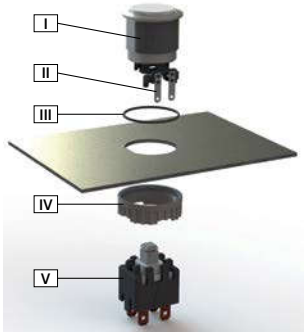

I Housing
II Flat Pin Terminal (Illumination)
III Gasket
IV Nut (Nut type see Dimensions)
V Module Switching Contact

Installation Instruction:
1.) Place the gasket accurately on the actuator housing. Then mount the actuator housing assembly into the panel.
2.) Tighten the screw nut according to the torque instructions.
3.) Clasp the module switching contact into the actuator housing.
Installation information:
1.) The power supply and the configuration of the flat pin terminals have to be installed correctly for the illumination and micro switch function.
2.) Insulate the terminals as required. Fully insulated plug-in sleeves are recommended.
3.) Installation instructions according to VDE-standard DIN VDE 0100-100 or alternatively IEC 60354 standard

Diagrams

MSM LA CS ST / single-pole

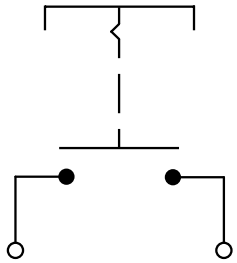

MSM LA CS ST / double-pole

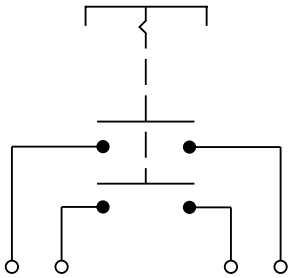

MSM LA CS AI / single-pole

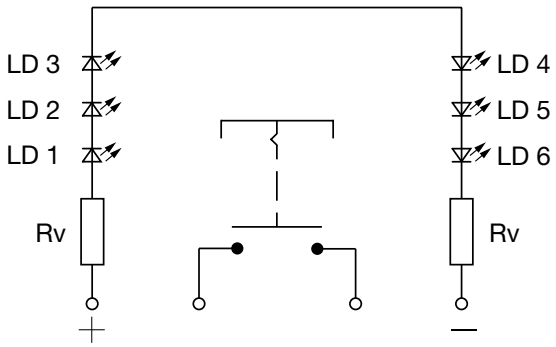

MSM LA CS AI / double-pole

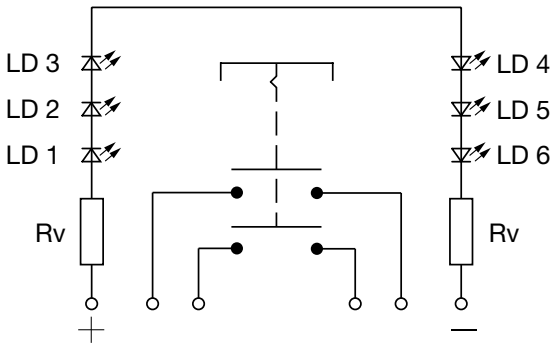

Contact Layout single-pole

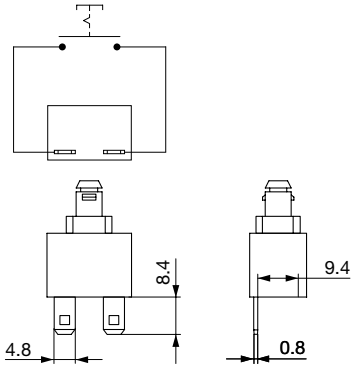

Contact Layout double-pole

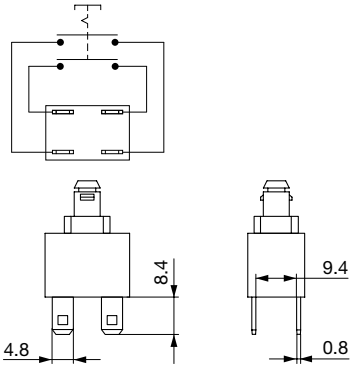

Lettering

The last three digits in the order number define the lettering:	
000	No Lettering
001-074	Standard Lettering
101-	Customized Lettering

Lettering Colour of Laser Lettering

Material	Lettering Colour	
Ceramic	black	Filled letters

Order Index Lettering

Laser Marking			
001 = **A**	021 = **U**	041 = ÷	061 = **EIN**
002 = **B**	022 = **V**	042 = ✳	062 = **AUS**
003 = **C**	023 = **W**	043 = **=**	063 = **AUF**
004 = **D**	024 = **X**	044 = #	064 = **AB**
005 = **E**	025 = **Y**	045 = ↔	065 = **ON**
006 = **F**	026 = **Z**	046 = ↕	066 = **OFF**
007 = **G**	027 = **0**	047 = →	067 = **UP**
008 = **H**	028 = **1**	048 = ←	068 = **DOWN**
009 = **I**	029 = **2**	049 = ↓	069 = **HIGH**
010 = **J**	030 = **3**	050 = ↑	070 = **LOW**
011 = **K**	031 = **4**	051 = %	071 = **ON/OFF**
012 = **L**	032 = **5**	052 = √	072 = **START**
013 = **M**	033 = **6**	053 = **CTRL**	073 = **RESET**
014 = **N**	034 = **7**	054 = **RETURN**	074 = ⏻
015 = **O**	035 = **8**	055 = **SHIFT**	075 = 💡
016 = **P**	036 = **9**	056 = **LOCK**	076 = 🔔
017 = **Q**	037 = **+**	057 = **STOP**	077 = ⓘ
018 = **R**	038 = **-**	058 = **ENTER**	
019 = **S**	039 = **.**	059 = **BACK**	
020 = **T**	040 = x	060 = **LINE**	

All Variants

Diameter [mm]	Number of Poles	Switching Current	Illumination, LED	Torsion Protection	Config. Code	Order Number	
22	1-pole	12 A	non-illuminated	yes	MSM 22 LA CS ST	1241.7231.1110000	
22	1-pole	12 A	Backlighted, red, 24 VDC	yes	MSM 22 LA CS AI red	1241.7236.1111000	
22	1-pole	12 A	Backlighted, green, 24 VDC	yes	MSM 22 LA CS AI green	1241.7236.1112000	
22	1-pole	12 A	Backlighted, yellow, 24 VDC	yes	MSM 22 LA CS AI yellow	1241.7236.1113000	
22	1-pole	12 A	Backlighted, blue, 24 VDC	yes	MSM 22 LA CS AI blue	1241.7236.1114000	
22	1-pole	12 A	Backlighted, white, 24 VDC	yes	MSM 22 LA CS AI white	1241.7236.1115000	
22	1-pole	12 A	Backlighted, orange, 24 VDC	yes	MSM 22 LA CS AI orange	1241.7236.1117000	
22	1-pole	12 A	Backlighted, bright red, 24 VDC	yes	MSM 22 LA CS AI bright red	1241.8556	▮
22	1-pole	12 A	Backlighted, bright green, 24 VDC	yes	MSM 22 LA CS AI bright green	1241.8557	▮
22	1-pole	12 A	Backlighted, bright blue, 24 VDC	yes	MSM 22 LA CS AI bright blue	1241.8559	▮
22	1-pole	12 A	Backlighted, bright white, 24 VDC	yes	MSM 22 LA CS AI bright white	1241.8560	▮
22	2-pole	12 A	non-illuminated	yes	MSM 22 LA CS ST	1241.7231.1120000	
22	2-pole	12 A	Backlighted, red, 24 VDC	yes	MSM 22 LA CS AI red	1241.7236.1121000	
22	2-pole	12 A	Backlighted, green, 24 VDC	yes	MSM 22 LA CS AI green	1241.7236.1122000	▮
22	2-pole	12 A	Backlighted, yellow, 24 VDC	yes	MSM 22 LA CS AI yellow	1241.7236.1123000	
22	2-pole	12 A	Backlighted, yellow, 24 VDC	yes	MSM 22 LA CS AI yellow	1241.7236.1123075	
22	2-pole	12 A	Backlighted, blue, 24 VDC	yes	MSM 22 LA CS AI blue	1241.7236.1124000	▮
22	2-pole	12 A	Backlighted, white, 24 VDC	yes	MSM 22 LA CS AI white	1241.7236.1125000	
22	2-pole	12 A	Backlighted, orange, 24 VDC	yes	MSM 22 LA CS AI orange	1241.7236.1127000	
22	2-pole	12 A	Backlighted, bright red, 24 VDC	yes	MSM 22 LA CS AI bright red	1241.8562	▮
22	2-pole	12 A	Backlighted, bright green, 24 VDC	yes	MSM 22 LA CS AI bright green	1241.8563	▮
22	2-pole	12 A	Backlighted, bright blue, 24 VDC	yes	MSM 22 LA CS AI bright blue	1241.8565	▮
22	2-pole	12 A	Backlighted, bright white, 24 VDC	yes	MSM 22 LA CS AI bright white	1241.8566	▮
22	1-pole	16 A	Backlighted, bright blue, 24 VDC	yes	MSM 22 LA CS AI bright blue	3-101-029	▮
22	1-pole	16 A	Backlighted, bright white, 24 VDC	yes	MSM 22 LA CS AI bright white	3-101-030	▮
22	1-pole	16 A	Backlighted, bright red, 24 VDC	yes	MSM 22 LA CS AI bright red	3-101-032	▮

Diameter [mm]	Number of Poles	Switching Current	Illumination, LED	Torsion Protection	Config. Code	Order Number	
22	1-pole	16 A	Backlighted, bright green, 24 VDC	yes	MSM 22 LA CS AI bright green	3-101-033	▮
22	2-pole	16 A	Backlighted, bright red, 24 VDC	yes	MSM 22 LA CS AI bright red	3-101-031	▮
22	2-pole	16 A	Backlighted, bright green, 24 VDC	yes	MSM 22 LA CS AI bright green	3-101-039	▮
22	2-pole	16 A	Backlighted, bright blue, 24 VDC	yes	MSM 22 LA CS AI bright blue	3-101-040	▮
22	2-pole	16 A	Backlighted, bright white, 24 VDC	yes	MSM 22 LA CS AI bright white	3-101-041	▮

Legend:
Type: MSM
CS = Ceramic Surface
ST = Standard: not lettered
LE = Lettering: lettered
AI = BL = Full Surface Backlighting: Lettering possible (see Lettering, last 3 digits)

Customer-specific versions available on request.
Special materials for use in salt and chlorinated environment on request.

The nut with gasket and micro switch are enclosed in the box.

▮ Most Popular.

Availability for all products can be searched real-time:http://www.schurter.com/Stock-Check/Stock-Check-SCHURTER

Packaging unit 10 in box with insert



- Actuating elements in ESD safe packaging
- Screw nuts and sealing rings in a bag (enclosd in the box)
- Micro switches (enclosed in the box)

Accessories

	Description
	MSM Cover Protection cover for MSM 19 and MSM 22
	Installation Wrench MSM 22 Installation wrench

10.01.2017

The specifications, descriptions and illustrations indicated in this document are based on current information. All content is subject to modifications and amendments. Information furnished is believed to be accurate and reliable. However, users should independently evaluate the suitability and test each product selected for their own applications.