F39
Miniature Puraire® oil removal filter



- Port size: G1/8 & G1/4
- Very compact unit
- Maximum remaining oil content to 0,01 mg/m3
- Particle removal to 0,01 µm
- Air purity classes in accordance to ISO8573-1: Remaining oil aerosol to class 1*
  *Tested in accordance with the methods laid out in ISO 12500-1 using an inlet oil aerosol concentration of 4mg/m^3.

Technical features

Medium:
Compressed air only

Maximum inlet pressure:
10 bar (145 psi) Transparent bowl
17 bar (246 psi) Metal bowl

Filter element:
0,01 µm

Remaining oil content:
0,01 mg/m3 at +21°C (+69°F)

Flow:
see below

Port sizes:
G1/8 or G1/4

Bowl:
31 ml

Drain:
Manual or automatic

Ambient/Media temperature:
Transparent bowl
-34 ... +50°C (-29 ... +122°F)
Metal bowl
-34 ... +65°C (-29 ... +149°F)
Air supply must be dry enough to avoid ice formation at temperatures below +2°C (+35°F)
Note:
Install an F07 filter with a 5 µm filter element upstream of the F39 filter for maximum service life.

Materials:
Body: Zinc alloy
Bowl: Plastic or Zinc alloy
Element: Synthetic fiber and PL foam
Seals: NBR

Technical data, Standardmodels

Symbol	Port size	Flow *1) (dm3/s)	Drain	Bowl	Weight (kg)	Model
	G1/8	2,8	Manual	Plastic	0,13	F39-100-M0TG
	G1/4	3	Manual	Plastic	0,13	F39-200-M0TG
	G1/8	2,8	Automatic	Plastic	0,13	F39-100-A0TG
	G1/4	3	Automatic	Plastic	0,13	F39-200-A0TG

*1) Max. flow at 6,3 bar

Option selector

F39-★00-★0★★

Port size	Substitute
1/8"	1
1/4"	2

Drain	Substitute
Automatic	A
Manual	M

Thread	Substitute
PTF	A
ISO G	G

Bowl	Substitute
Plastic	T
Metal	M

Typical performance characteristics

Inlet pressure (bar)	Flow *1) (dm3/s)
1	1,2
3	2,0
5	2,7
6,3	3,0
7	3,1
9	3,6

*1) Maximum flow to maintain stated oil removal performance.

Our policy is one of continued research and development. We therefore reserve the right to amend, without notice, the specifications given in this document. (1998 - 8115g) © 2024 Norgren GmbH.

Accessories

Wall mounting bracket



5939-06



Service kit

filter element



F39-KIT0C

Dimensions

Manual drain

Automatic drain

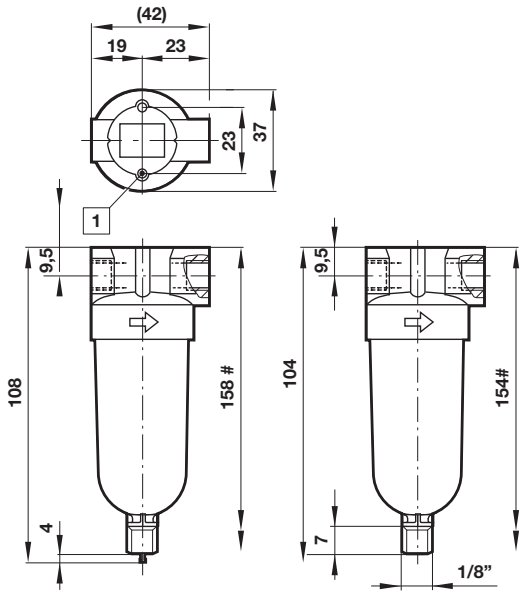

Wall mounting bracket

Dimensions in mm
Projection/First angle

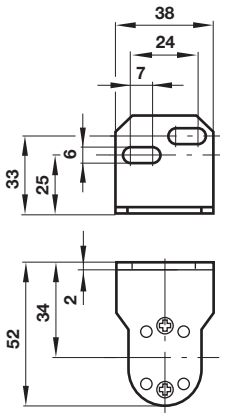

Use 1/8” (3 mm) screws
to mount bracket to wall.

Minimum clearance required to remove bowl
1 Holes ø 4, 13 deep

Warning

These products are intended for use in industrial compressed air systems only. Do not use these products where pressures and temperatures can exceed those listed under **»Technical features/ data«.**

Before using these products with fluids other than those specified, for non-industrial applications, life-support systems or other applications not within published specifications,
consult Norgren Ltd.

Through misuse, age, or malfunction, components used in fluid power systems can fail in various modes.

The system designer is warned to consider the failure modes of all component parts used in fluid power systems and to provide adequate safeguards to prevent personal injury or damage to equipment in the event of such failure.

System designers must provide a warning to end users in the system instructional manual if protection against a failure mode cannot be adequately provided.

System designers and end users are cautioned to review specific warnings found in instruction sheets packed and shipped with these products.

Our policy is one of continued research and development. We therefore reserve the right to amend, without notice, the specifications given in this document. (1998 - 8115g) © 2024 Norgren GmbH.