*Item Based Datasheet*

**Diaphragm Pressure Gauges, Process Industry**
**Modelcode type: 4XX.XX**
**Item number: 8503400**

| Diaphragm Pressure Gauges, Process Industry | |
|---|---|
| Design | EN 837-3 |
| Nominal size | 100 mm |
| Accuracy class | class 1.6 |
| Scale range | 0...100 mbar |
| Unit of outer Scale | mbar |
| Overpressure safety | 5 x Full scale value, max 40 bar |
| Process connection | 1/2 NPT |
| Case | with pressure blowout disk |
| **Materials** | |
| Lower Body Material | Stainless-Steel |
| Diaphragm Material | stainless steel |
| Sealing of pressure chamber | FPM |
| Movement | stainless steel |
| Dial | Aluminum, white |
| Case material | Stainless steel 1.4301 |
| Window | laminated safety glass |
| Bezel ring | cam ring (bayonet type), stainless steel |
| **Operating conditions** | |
| Permissible ambient temperature | -20 … +60 °C |
| Ingress protection | IP 54 |
| **Options** | |
| **Labelcode** | |
| Label | WIKA standard without / with Tag-number |
| language of the label | German |

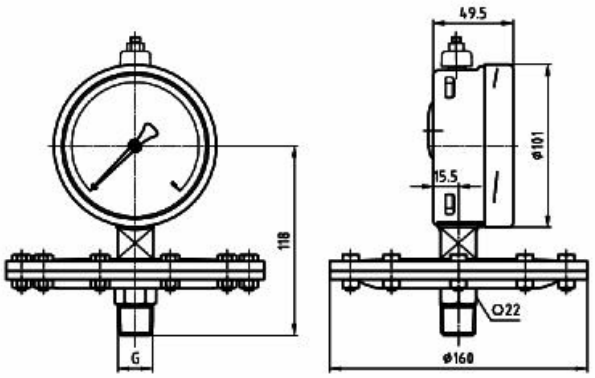


© Copyright by WIKA: Reproduction of this document is prohibited