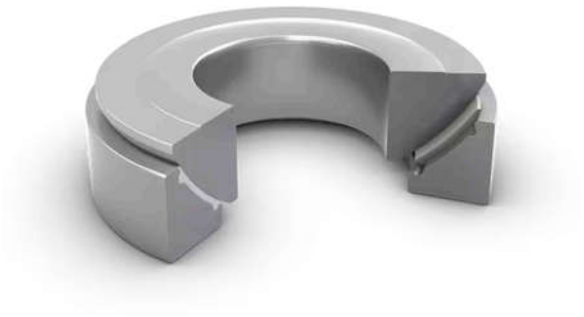

Image may differ from product. See technical specification for details.

GX 45 F

Thrust spherical plain bearing, maintenance-free, metric sizes

Thrust spherical plain bearings are designed to accommodate axial and combined radial and axial loads. This specific design includes a steel/PTFE FRP sliding contact surface combination that is maintenance-free. However, relubrication, which can be applied from both sides, can extend bearing service life.

- Designed for axial and combined radial and axial loads
- Separable shaft and housing washers enable easier mounting
- Long service life and maintenance-free
- Relatively insensitive to contaminants
- Low coefficient of friction

Overview

Dimensions

Bore diameter	45 mm
Outside diameter	120 mm
Height, total	36.5 mm
Height, shaft washer	31 mm
Height, housing washer	25.5 mm

Performance

Basic dynamic load rating	224 kN
Basic static load rating	355 kN

Properties

Sliding contact surface combination	Steel/PTFE FRP
Material, shaft washer	Bearing steel
Material, housing washer	Bearing steel
Maintenance	Maintenance-free
Sealing	Without
Relubrication feature	Without

Logistics

Product net weight	2.32 kg
eClass code	23-05-01-06
UNSPSC code	31171515

Technical specification

Sliding contact surface combination	Steel/PTFE FRP
Material, shaft washer	Bearing steel
Material, housing washer	Bearing steel
Relubrication feature	Without
Sealing	Without

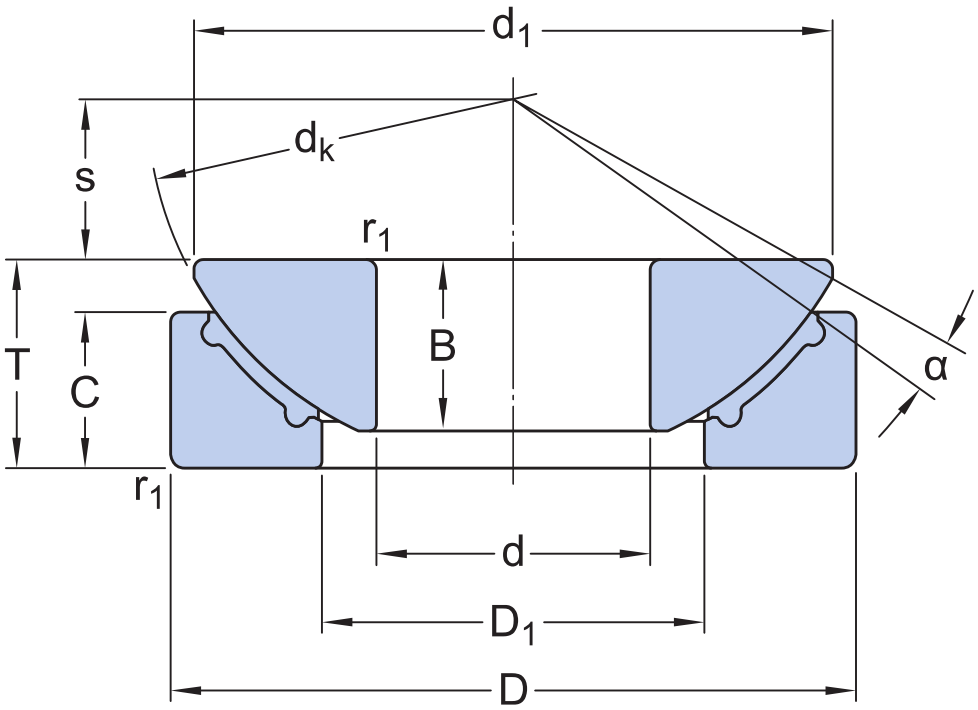

Dimensions

d	45 mm	Bore diameter
D	120 mm	Outside diameter
T	36.5 mm	Height
α	6.2 °	Angle of tilt
d_k	128 mm	Raceway diameter inner ring (sphere diameter shaft washer)
d_1	110 mm	Outside diameter inner ring (shaft washer)
D_1	67 mm	Bore diameter outer ring (housing washer)
B	31 mm	Height inner ring (shaft washer)
C	25.5 mm	Height outer ring (housing washer)

r_1	min. 1 mm	Chamfer dimension
s	27.5 mm	Distance sphere diameter centre - shaft washer back face (large inner ring side face)

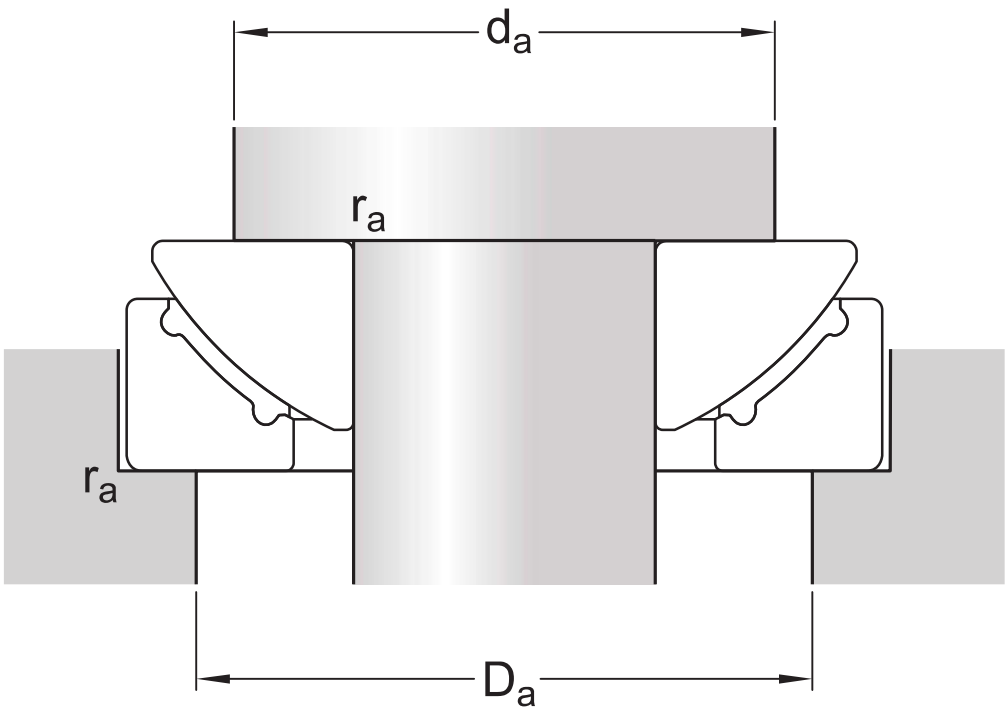

Abutment dimensions

d_a	min. 89 mm	Abutment diameter shaft
D_a	max. 97 mm	Abutment diameter housing
r_a	max. 1 mm	Fillet radius

Calculation data

Basic dynamic load rating - axial direction	C	224 kN
Basic static load rating - axial direction	C_0	355 kN
Specific dynamic load factor	K	50 N/mm²
Specific static load factor	K_0	80 N/mm²
Material constant	K_M	670

Tolerances and clearances

- General bearing specifications

More Information

Product details

- Designs and series
- General bearing specifications
- Temperature limits

Engineering information

- Principles of selection

Tools

- SKF Product select
- Heater selection tool

Terms of use

By accessing and using this website / app owned and published by AB SKF (publ.) (556007-3495 · Gothenburg) (“SKF”), you agree to the following terms and conditions:

Warranty Disclaimer and Limitation of Liability
Although every care has been taken to assure the accuracy of the information on this website / app, SKF provides this information "AS IS" and DISCLAIMS ALL WARRANTIES, EXPRESS OR IMPLIED, INCLUDING, BUT NOT LIMITED TO, IMPLIED WARRANTIES OF MERCHANTABILITY AND FITNESS FOR A PARTICULAR PURPOSE. You acknowledge that your use of this website / app is at your sole risk, that you assume full responsibility for all costs associated with use of this website / app, and that SKF shall not be liable for any direct, incidental, consequential, or indirect damages of any kind arising out of your access to, or use of the information or software made available on this website / app.

Any warranties and representations in this website / app for SKF products or services that you purchase or use will be subject to the agreed upon terms and conditions in the contract for such product or service.

Further, for non-SKF websites / apps that are referenced in our website / app or where a hyperlink appears, SKF makes no warranties concerning the accuracy or reliability of the information in these websites / apps and assumes no responsibility for material created or published by third parties contained therein. In addition, SKF does not warrant that this website / app or these other linked websites / apps are free from viruses or other harmful elements.

Third Party Services
When viewing YouTube content via the SKF website(s) (i.e. using YouTube API Services), you agree to be bound by the YouTube Terms of Service.

Copyright
Copyright in this website / app copyright of the information and software made available on this website / app rest with SKF or its licensors. All rights are reserved. All licensed material will reference the licensor that has granted SKF the right to use the material. The information and software made available on this website / app may not be reproduced, duplicated, copied, transferred, distributed, stored, modified, downloaded or otherwise exploited for any commercial use without the prior written approval of SKF. However, it may be reproduced, stored and downloaded for use by individuals without prior written approval of SKF. Under no circumstances may this information or software be supplied to third parties.

This website /app includes certain images used under license from Shutterstock, Inc.

Trademarks and Patents
All trademarks, brand names, and corporate logos displayed on the website / app are the property of SKF or its licensors, and may not be used in any way without prior written approval by SKF. All licensed trademarks published on this website / app reference the licensor that has granted SKF the right to use the trademark. Access to this website / app does not grant to the user any license under any patents owned by or licensed to SKF.

Changes
SKF reserves the right to make changes or additions to this website / app at any time.