E30147

O-ring

O-RG 31x1,5 ASEPTOFLEX FPM

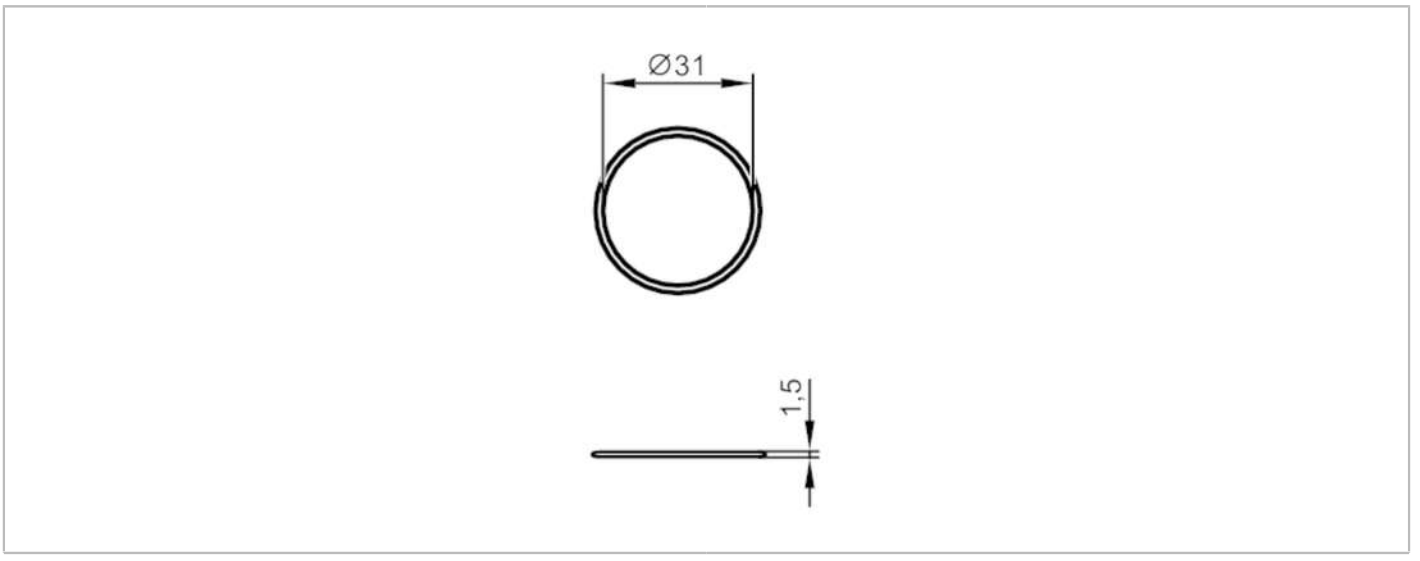

Mechanical data		
Weight	[g]	5.2
Inside diameter	[mm]	31
External diameter	[mm]	34
Materials		FKM
Remarks		
Pack quantity		10 pcs.