# Temperature sensor

## Hex Bolt Sensor ETP-SP-PT

- Temperature range -40 to +250°C
- Miniature design with M8 hexagonal bolt
- PT100 and PT1000 available
- Custom designs available
- Higher temperature range available
- Versatile temperature probe with screw body



**Applications**

- Heating / cooling systems
- Laboratory
- Industrial process
- Energy
- HVAC
- Drilling

## Ordering information for standard stock model:

**Stock model number:** ETP - SP - 8 - 23 - PT100B

A L T

- T – Thermistor type
- L – Probe cable length
- A – Probe thread size

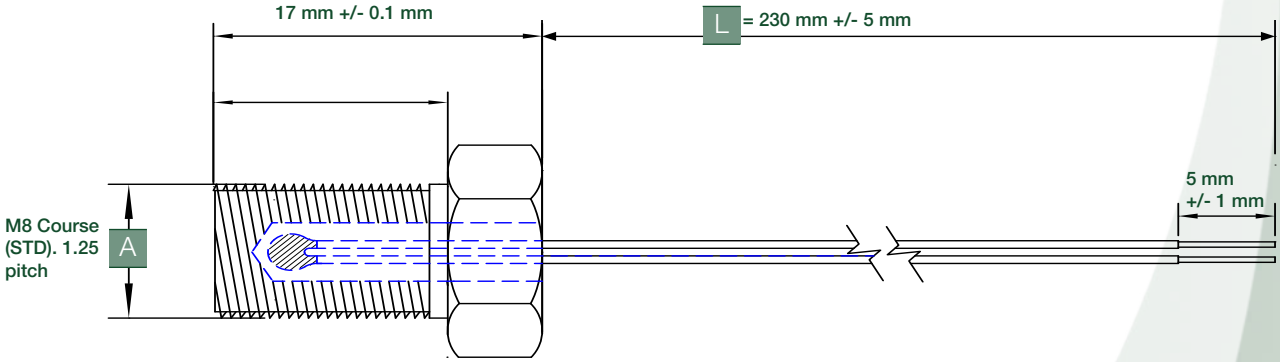


**Technical parameters for stock model**

| | Unit | Value |
|---|---|---|
| Sensing element | | PT100 class B |
| Accuracy | °C | ± (0,3 K + 0,005 x \|t\|) |
| Operating temperature | °C | -40 to +250 |
| Epoxy thermal conductivity | W/(m.K) | 1.7 |

**Materials**

| | |
|---|---|
| Leads and insulation | PFA sheathed twisted pair 7/0.2 with PTFE heat shrink |
| Probe material | Stainless steel |

**Features**

- Cost effective - off the shelf model
- Stock model - reduced lead times
- Improved potting epoxy has outstanding thermal conductivity for faster response times

## Ordering information for custom designs:

**Use the information below to build up a custom probe design.**

**A – Probe thread size**

| Order Code A = | 6 | 7 | 8 | x |
|---|---|---|---|---|
| Thread size in mm | M6 | M7 | M8 | Optional thread size |

**L – Probe cable length**

| Order Code L = | 5 | 10 | 15 | 20 | 23 | 25 | 30 | 35 | 40 | 45 | x |
|---|---|---|---|---|---|---|---|---|---|---|---|
| Length in mm +/- 5 mm | 50 | 100 | 150 | 200 | 230 | 250 | 300 | 350 | 400 | 450 | Custom length |

**T – Thermistor type**

| Order Code T = | PT100B = PT100 class B<br>PT100A = PT100 class A<br>PT1000B = PT1000 class B<br>PT1000A = PT1000 class A |
|---|---|


Variohm EuroSensor - Williams' Barn - Tiffield Road -Towcester - Northants -NN12 6HP - UK
sales@variohm.com • www.variohm.com • +44 (0) 1327 351004



Subject to change without notice