# multimec® RAS + 1D/1K/1P/1S



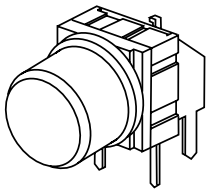

**Technical Data:**

- through-hole only
- 50mA/24VDC
- single pole/momentary
- 10.000.000 operations life time
- IP67 sealing
- temperature range:
  low temp: -40/+115ºC

**Dimensions 1D**

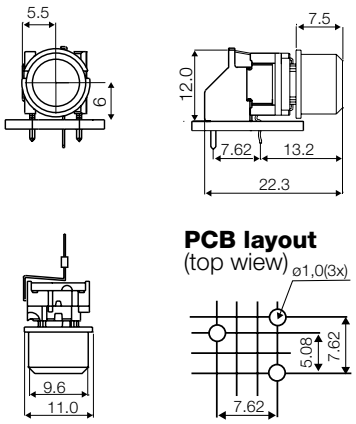


**Dimensions 1K**

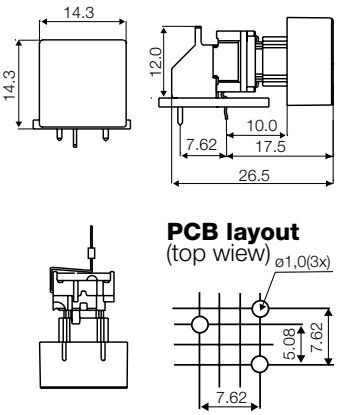


**Dimensions 1P**

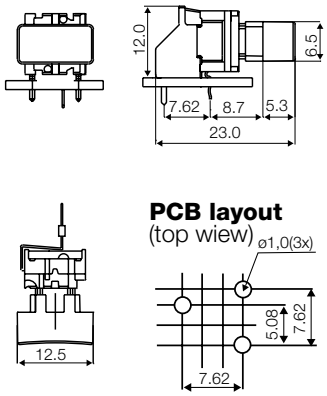


**Dimensions 1S**

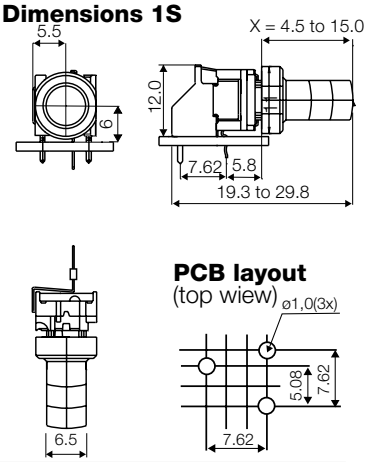


## HOW TO ORDER

**3 F** **Switch**

**T** **Mounting**
**T** through-hole

**L 6** **L 6** low temp.

**R A S** + Right angle support

**1 D** **Cap**



**00** blue
**02** green
**03** grey
**04** yellow
**06** white
**08** red
**09** black
**30** ultra blue
**40** dusty blue
**42** aqua blue
**32** mint green
**33** tele grey
**34** melon
**38** noble red
**50** metal dark blue
**53** metal light grey
**57** metal dark grey
**58** metal bordeaux

**1 P** **Cap**



**00** blue
**03** grey
**08** red
**09** black

**1 K** **1 6** + **2 K** **Cap**



**00** blue
**02** green
**03** grey
**04** yellow
**06** white
**08** red
**09** black

**Bezel**

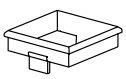

**03** grey
**06** white
**08** red
**09** black

**1 S 0 9 - . ** **Cap black**

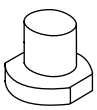

| H | X * |
|---|---|
| 16.0 | 8.5 |
| 19.0 | 11.5 |
| 22.5 | 15.0 |

**Standard versions:**
3FTL6RAS, 3CTL6RAS,

*Any cap height X from 8.5 to 15.0 mm is available. Please order 1S09-H, where H = X+7.5 mm
Min. order Qty for custom heights is 2.000 pcs. A start-up charge will apply.
3CTL6 also available as right angle switch 3CTL6RAS. Please see multimec basic switch modules.

**Ordering example:** 3FTL6RAS + 1K0016 + 2K03

mec a/s jan. 2003

**mec** · Industriparken 23 · P.o. Box 26 · DK-2750 Ballerup · Denmark
Tel.: +45 44 97 33 66 · Fax: +45 44 68 15 14 · Web: www.mec.dk. · E-mail: danmec@mec.dk