VARIMETER IMD
Insulation monitor
UH 5892

Translation of the original instructions

0270804



Product Description

The insulation monitor UH 5892 of the series varimeter IMD monitors the ground resistance of isolated DC-voltage systems (IT-systems) with nominal voltage up to DC 600 V. The unit detects symmetrical as well as unsymmetrical faults. The separate auxiliary supply of AC/DC 24 ... 60 V or AC/DC 85 ... 230 V allows also monitoring when the system is without voltage. To indicate the actual ground resistance value the unit has an LED chain and an analogue output. When a fault is detected the relay switches and the red LED Alarm lights up, The device can be used for system with leakage capacities up to 20 uF.

Function Diagram

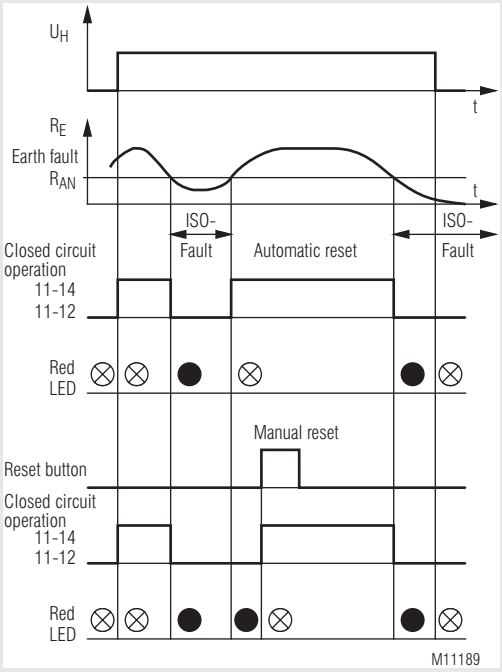

Your Advantages
- Preventive fire and system protection
- Insulation monitoring of DC and AC-systems up to DC 600 V
- And AC 400 V nominal voltage
- No additional coupling device required
- Suitable for leakage capacitances up to 20 µF
- Monitoring also with voltage-free mains
- 2 wide voltage input ranges for auxiliary voltage

Features
- Insulation monitoring according to IEC/EN 61557-8
- Detection of symmetric and asymmetric insulation faults
- 1 changeover contact for alarm
- Fixed response value R_{AN}: 50 kΩ, other on request
- Internal reset and test pushbutton
- External test and reset pushbutton can be connected
- LED indicator for auxiliary voltage and alarm
- LED chain to indicate the current insulation resistance
- Automatic or manual reset, programmable
- Analogue output for insulating value
- External indicating instrument can be connected
- Closed circuit operation
- Open circuit operation on request
- With pluggable terminal blocks for easy exchange of devices
  - With screw terminals
  - Or with cage clamp terminals
- Width 45 mm

Approvals and Markings

CE | AC/DC | UKCA

Applications

Monitoring of the resistance to earth in ungrounded DC systems

Function

The device is supplied with auxiliary voltage via terminals A1(+)/A2; ea green "ON" LED comes on. After connecting the auxiliary supply a 10 s start up delay is active allowing the measuring circuit to start.
After this, measurement of the insulation resistance in the measuring circuits begins.

Measuring circuit
(Insulation measurement between terminals L(+)/L(-) and PE1/PE2).

Terminals L(+) and L(-) are connected to the mains to be monitored.
In addition, the two terminals PE1 and PE2 must be connected to the protective conductor system via separate lines. An active measuring voltage with alternating polarity is applied between L(+)/L(-) and PE1/PE2 to measure the insulation resistance.

The length of the positive and negative measuring phases has a fixed factory setting of 16 s (max. leakage capacitance of 20 µF).
The LED-chain and the analogue output show the actual determined insulating resistance, and the output relays witch according to the respective response values set. If the response thresholds has been undercut the red LED "Alarm" lights up.

All Technical Data in this list relate to the state at the moment of edition. We reserve the right for technical improvements and changes at any time.

Indicators

Green LED "ON":	On, when auxiliary supply connected
Red LED "Alarm":	On, when resistance is below the response value R_{AN}
LED-chain:	The approx. value of actual rsistance to ground (PE)

Circuit Diagrams

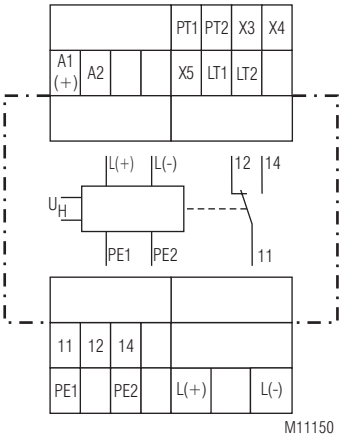

M11150

Connection Terminals

Terminal designation	Signal description
A1(+), A2	Auxiliary voltage U_H
L(+), L(-)	Connection for measuring circuit
PE1, PE2	Connection for protective conductor
X5(/LT1)	Control input (manual/auto reset) X5/LT1 bridged: Manual reset X5/LT1 not bridged: Auto reset
PT1, PT2	Connection option for external device test pushbutton
LT1, LT2	Connection option for external reset pushbutton
X3, X4	Analogue output
11, 12, 14	Alarm signal relay (1 changeover contact)

Notes

Risk of electrocution!
Danger to life or risk of serious injuries.

- Disconnect the system and device from the power supply and ensure they remain disconnected during electrical installation.
- The terminals of the control input X5, LT1, LT2, PT1 and PT2 have no galvanic separation to the measuring circuit L(+) and L(-) and are electrically connected together, therefore they have to be controlled by volt free contacts or bridge. These contacts ore bridges must provide a sufficient separation depending on the mains voltage on L(+)-L(-).
- No external potentials may be connected to control terminals X5, LT1, LT2, PT1 and PT2.
- The terminals of the control input X3 and X4 have no galvanic separation to the measuring circuit L(+) and L(-) and are electrically connected together, therefore they have to be controlled by volt free contacts or bridge. Connected devices/indicators must provide a sufficient separation depending on the mains voltage on L(+)-L(-).

Attention!

- Before checking insulation and voltage, disconnect the monitoring device UH 5892 from the power source!
- In one voltage system only one insulation monitor can be used. This has to be observed when interconnecting two separate systems.
- The device must not be operated without PE1/PE2 connection!
- On fluctuation of the mains voltage momentary false readings can occur. This is normal and caused by the cyclic measuring principle.

Attention!

- If a monitored AC system includes galvanically connected DC circuits (e.g. via a rectifier), an insulation failure on the DC side can only be detected correctly, when a current of min 10 mA can flow via the semiconductor connections.
- If a monitored DC system includes galvanically connected AC circuits (e.g. via an inverter), an insulation failure on the AC side can only be detected correctly, when a current of min 10 mA can flow via the semiconductor connections.
- The response value R_{AN} is fixed. An external indicator instrument can be connected.
- The unit works de-energized on trip, that means, the output relay relase in position of rest at a insulation failures ($R_E < R_{AN}$).
- A bridge between X5 and LT1 allows to select auto or manual reset. The UH 5892 has a built in reset button on the front and allows connection of an external button at terminals LT1 and LT2 also.
- For function test an external (terminals PT1-PT2) or built in push button can be used to simulate a ground fault. The push button has to be pressed for the length of a measuring period.
- The analogue output (terminals X3 and X4) provides a voltage signal proportional to the actual insulation resistance of the mains. The following formula describes the input to output ratio:

(0 V at $R_E = 0$ and 13.0 .... 13.5 V at $R_E = \infty$)

$$U_A = \frac{U_{max}}{\frac{180\ k\Omega}{R_E} + 1} \quad ; \qquad U_{max} = 13.25\ V \pm 0.25\ V$$

These values for U_A are valid for $C_E = 0$ (see characteristic). In practice it makes no sense to monitor values above 11 ... 12 V as the tolerances increase, especially with mains capacity.

Technical Data

Auxiliary circuit

Auxiliary voltage U_H	Voltage range	Frequency range
AC/DC 24 … 60 V	AC 19 … 68 V	45 … 400 Hz; DC 48 % W*)
	DC 18 … 96 V	W*) ≤ 5 %
AC/DC 85 ... 230 V	AC 65 … 276 V	45 … 400 Hz; DC 48 % W*)
	DC 75 … 300 V	W*) ≤ 5 %
*) W = Permitted residual ripple of auxiliary supply		

Nominal consumption: Max. 1.5 W

Measuring Circuit

Nominal voltage U_N: DC 0 ... 600 V / AC 0 ... 400 V
Voltage range: 0 ... 1.15 U_N
Frequency range: DC or 40 ... 60 Hz
Response value R_{AN}: 50 kΩ, 10 ... 440 kΩ on request
Setting R_{AN}: Fixed
Internal AC resistance: > 120 kΩ
Internal DC resistance: > 150 kΩ
Measuring voltage: Approx. ± 13 V
Max. measuring current (R_E = 0): < 0.3 mA
Max. line capacitance: 1 ... 20 µF
Operate delay
at R_{AN} = 50 kΩ, C_E = 20 µF
R_E from ∞ to 0.9 R_{AN}: < 100 s
R_E from ∞ to 0 kΩ: < 60 s
Hysteresis
at R_{AN} = 50 kΩ: Approx. 5 %
Response inaccuracy: ± 15% ± 1.5 kΩ IEC/EN 61557-8

Output

Contacts: 1 changeover contact
Max. switching voltage: AC 250 V
Thermal current I_{th}: 5 A
Switching capacity
to AC 15:
NO contact: 5 A / AC 230 V IEC/EN 60947-5-1
NC contact: 2 A / AC 230 V IEC/EN 60947-5-1
Short circuit strength
max. fuse rating: 6 A gG / gL IEC/EN 60947-5-1
Electrical life
at 5 A, AC 230 V: 1 x 10^5 switching cycles
Mechanical life: > 50 x 10^6 switching cycles

Analogue output

For actual insulating value, no galvanic separation
Terminals X3-X4: Typ. 0 ... 13.25 V / R_i approx. 50 Ω
(0 V at R_E = 0 and 13.0 ... 13.5 V
at R_E = ∞)
X4 is internal connected with PE

General Data

Operating mode: Continuous operation
Temperature range
Operation: - 25 ... + 60 °C
Storage: - 25 ... + 70 °C
Altitude: ≤ 2000 m
Clearance and creepage distances
Overvoltage category / pollution degree: IEC 60664-1
Meas. ciruit to auxiliary voltage and relay contact: 6 kV/2
Aux. voltage to relay contact: 6 kV/2
Insulation test voltage
Routine test: AC 4 kV; 1 s

Technical Data

EMC
Electrostatic discharge: 8 kV (air) IEC/EN 61000-4-2
HF irradiation
80 MHz ... 1 GHz: 20 V / m IEC/EN 61000-4-3
1 GHz ... 2.7 GHz 10 V / m IEC/EN 61000-4-3
Fast transients: 4 kV IEC/EN 61000-4-4
Surge voltage
between A1(+) - A2 and
L(+) - L(-): 1 kV IEC/EN 61000-4-5
Between A1(+), A2 - PE and
L(+), L(-) - PE: 2 kV IEC/EN 61000-4-5
Between control lines: 0.5 kV IEC/EN 61000-4-5
Between control lines
and ground: 1 kV IEC/EN 61000-4-5
HF-wire guided: 20 V IEC/EN 61000-4-6
Interference suppression: Limit value class B EN 55011
Degree of protection
Housing: IP 40 IEC/EN 60529
Terminals: IP 20 IEC/EN 60529
Housing: Thermoplastic with V0 behaviour according to UL subject 94
Vibration resistance: Amplitude 0.35 mm IEC/EN 60068-2-6
frequency 10 ... 55 Hz
Climate resistance: 25 / 060 / 04 IEC/EN 60068-1
Terminal designation: EN 50005
Wire connection: DIN 46228-1/-2/-3/-4
Plug in with screw terminals
Max. cross section
for connection: 1 x 0.25 ... 2.5 mm² solid or stranded ferruled (isolated) or 2 x 0.25 ... 1.0 mm² solid or stranded ferruled (isolated)
Insulation of wires
or sleeve length: 7 mm
Plug in with cage clamp terminals
Max. cross section
for connection: 1 x 0.25 ... 2.5 mm² solid or stranded ferruled (isolated) 2 x 0.25 ... 1.5 mm² stranded twin ferruled (isolated)
Insulation of wires
or sleeve length: 10 mm
Wire fixing: Captive slotted screw or cage clamp terminals
Fixing torque: 0.8 Nm
Mounting: DIN rail IEC/EN 60715
Weight: Approx. 270 g

Dimensions

Width x height xdepth: 45 x 107 x 121 mm

Classification to DIN EN 50155

Vibration and
shock resistance: Category 1, Class B IEC/EN 61373
Service temperature classes: OT1 compliant
Protective coating of the PCB: No

Standard Types

UH 5892.11PS AC/DC 24 ... 60 V 50 kΩ
Article number: 0066309
- Output: 1 changeover contact
- Auxiliary voltage U_H: AC/DC 24 ... 60 V
- Response value R_{AN}: 50 kΩ
- Line capacitance: 20 µF
- De-energiezed on trip
- Width: 45 mm

UH 5892.11PS AC/DC 85 ... 230 V 50 kΩ
Article number: 0066946
- Output: 1 changeover contact
- Auxiliary voltage U_H: AC/DC 85 ... 230 V
- Response value R_{AN}: 50 kΩ
- Line capacitance: 20 µF
- De-energiezed on trip
- Width: 45 mm

Options with Pluggable Terminal Blocks

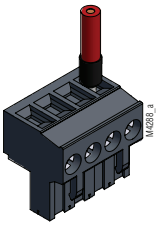

Screw terminal
(PS / plug in screw)

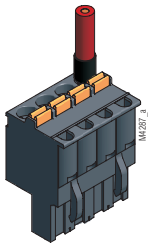

Cage clamp terminal
(PC / plug in cage clamp)

The 3-pole terminal block for L(+) / L(-) is in the model with cage clamp terminals(PC) only availble as screw terminal (PS).

Accessories

EH 5861/004:

Indicating instrument,
degree of protection: IP 52
Article number: 0030618



The indicating device EH 5861 is externally connected to the insulation monitor and shows the actual insulation resistance of the voltage system to ground.
Dimensions:
Width x heigth x depth
96 x 96 x 52 mm

Connection Examples

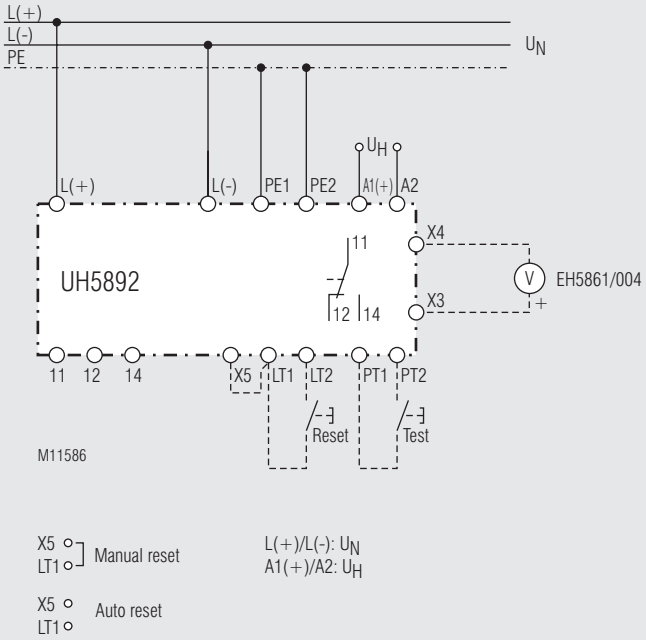

Analogue Output Voltage U_A (Terminals X3-X4)

against Insulation Resistance R_E with C_E = 0

Parameter: Max. Analogue Output Voltage **Umax** (at R_E = infinite)

