1400N SERIES

MOMENTARY PUSHBUTTON SWITCHES - SNAP-IN MOUNTING - SQUARE PLUNGER

Specifications

ELECTRICAL SPECIFICATIONS

- Max. current/voltage rating with resistive load :
  - silver contacts (A) : 3A 250VAC - 5A 125VAC - 6A 12VDC
  - silver plated copper contacts (C) : 2A 250VAC - 4A 125 VAC
- Initial contact resistance : 10 mΩ at 1A 2VDC
- Insulation resistance : 1.000 MΩ min. at 500VDC
- Dielectric strength :
  1.500 Vrms 50 Hz min. between terminals
  2.000 Vrms 50 Hz min. between terminals and metal panel
- Electrical life : 10.000 cycles at full load

MATERIALS

- Case : polyamide
- Plunger : polyamide
- Contacts :
  A : silver
  C : copper, silver plated

GENERAL SPECIFICATIONS

- Panel thickness : 2 mm (.078) max.
- Operating temperature : -20°C to +55°C

K

Dimensions : first dimensions are in mm while inches are shown as bracketted numbers.

Packaging unit : 60 pieces.

1400N SERIES

MOMENTARY PUSHBUTTON SWITCHES - SNAP-IN MOUNTING - SQUARE PLUNGER

Solder lug, straight PC or quick-connect terminals

MODEL STRUCTURE

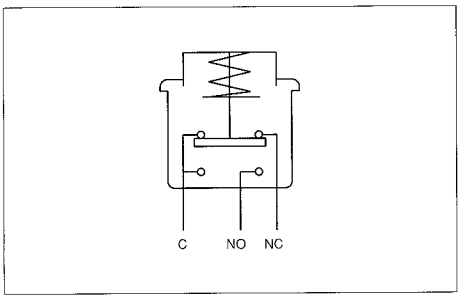

- Butt action contacts, double break
- Single pole configurations

141.N

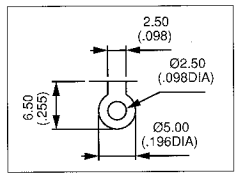

144.N

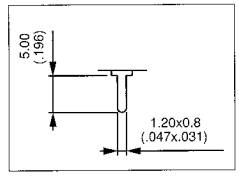

141.N/8

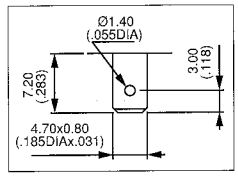

MODEL STRUCTURE

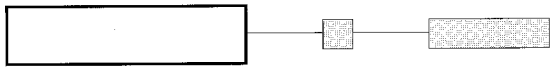

Solder lug terminals

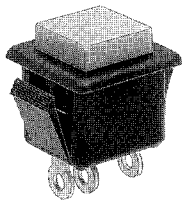

1412N		Normally Closed
1413N		Normally Open
1415N		Changeover

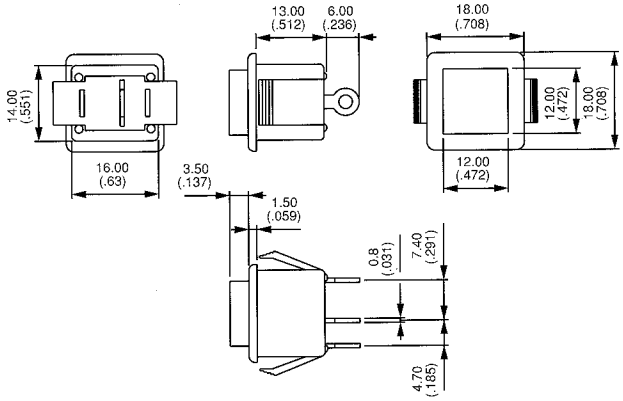

Straight PC terminals

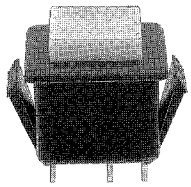

1442N		Normally Closed
1443N		Normally Open
1445N		Changeover

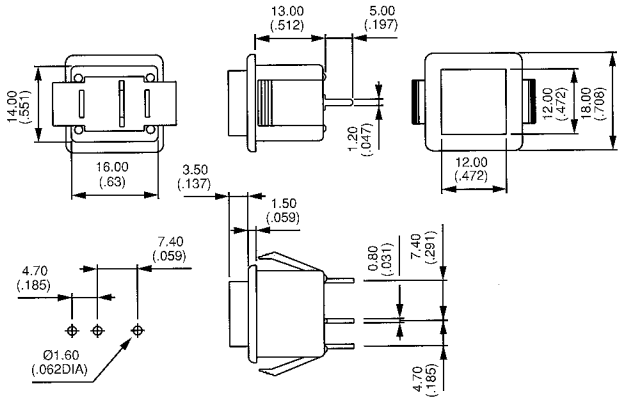

Quick-connect terminals 4,7 x 0,8 (.185 x .031)

1412N/8		Normally Closed
1413N/8		Normally Open
1415N/8		Changeover

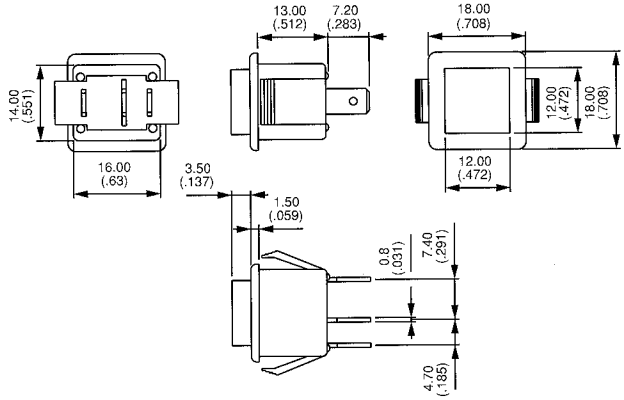

K

PANEL CUT-OUT

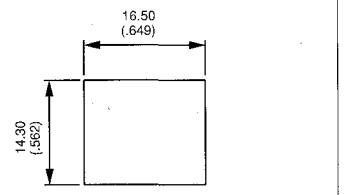

CONTACT MATERIALS

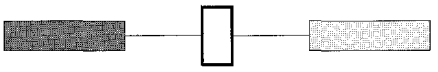

A	Silver
C	Copper, silver plated

PLUNGER COLOURS

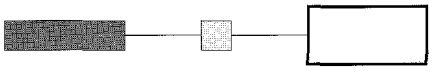

2	Black (standard)
3	Green
6	Red
7	Ivory

⚠ Switch frame supplied in black.

K