IE5388

Inductive sensor

IEB3002BAPKG/0,8M/FH/AS

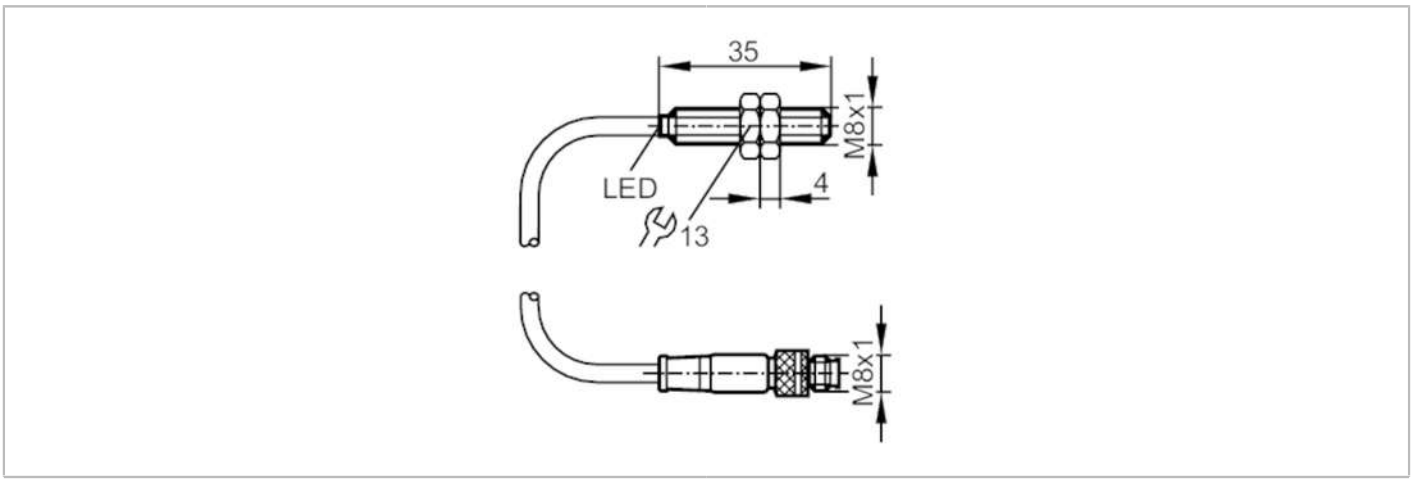

Product characteristics		
Electrical design		PNP
Output function		normally closed
Sensing range	[mm]	2
Housing		threaded type
Dimensions	[mm]	M8 x 1 / L = 35
Electrical data		
Operating voltage	[V]	10...36 DC
Current consumption	[mA]	< 15
Protection class		III
Reverse polarity protection		yes
Outputs		
Electrical design		PNP
Output function		normally closed
Max. voltage drop switching output DC	[V]	2.5
Permanent current rating of switching output DC	[mA]	200
Short-time current rating of switching output	[mA]	200
Switching frequency DC	[Hz]	850
Short-circuit protection		yes
Type of short-circuit protection		pulsed
Overload protection		yes
Detection zone		
Sensing range	[mm]	2
Real sensing range Sr	[mm]	2 ± 10 %
Accuracy / deviations		
Correction factor		steel: 1 / stainless steel: 0.7 / brass: 0.5 / aluminium: 0.4 / copper: 0.3
Hysteresis	[% of Sr]	1...15

IE5388

Inductive sensor

IEB3002BAPKG/0,8M/FH/AS

Switch point drift	[% of Sr]	-10...10	
Operating conditions			
Ambient temperature	[°C]	-25...70	
Protection		IP 67	
Tests / approvals			
EMC		EN 60947-5-2	
MTTF	[years]	2826	
Mechanical data			
Weight	[g]	32.1	
Housing		threaded type	
Mounting		flush mountable	
Dimensions	[mm]	M8 x 1 / L = 35	
Thread designation		M8 x 1	
Materials		brass white bronze coated; LCP	
Displays / operating elements			
Display		switching status	1 x LED, yellow
Remarks			
Pack quantity		1 pcs.	
Electrical connection - plug			

Cable: 0.8 m, PUR; flame-retardant (FRNC); 3 x 0.14 mm²

Connector: 1 x M8; coding: A



Connection

