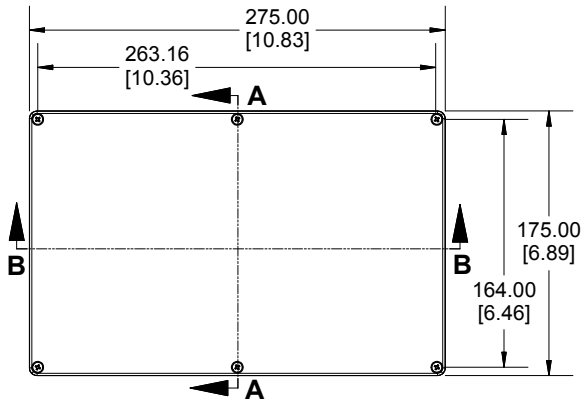

TOP VIEW

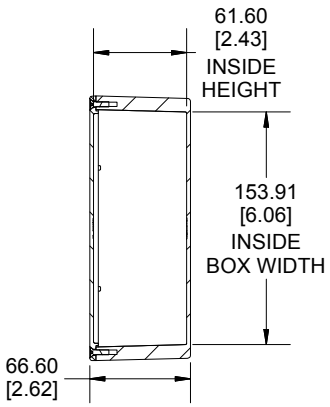

SECTION A-A
END VIEW

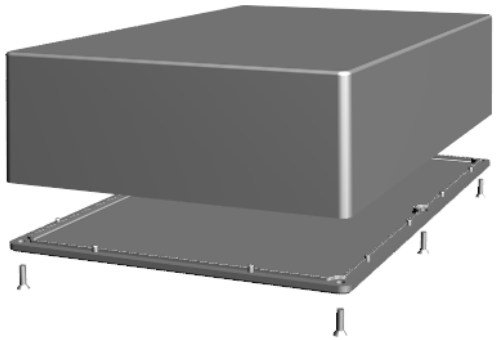

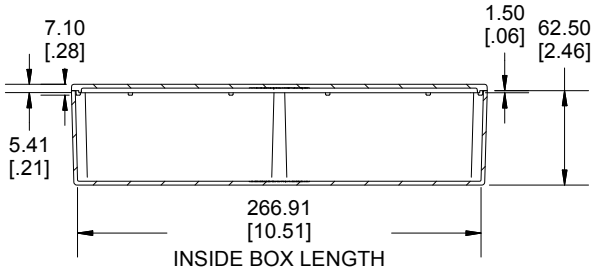

SECTION B-B
SIDE VIEW

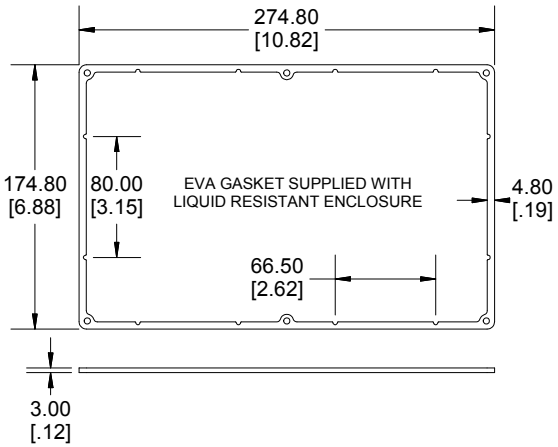

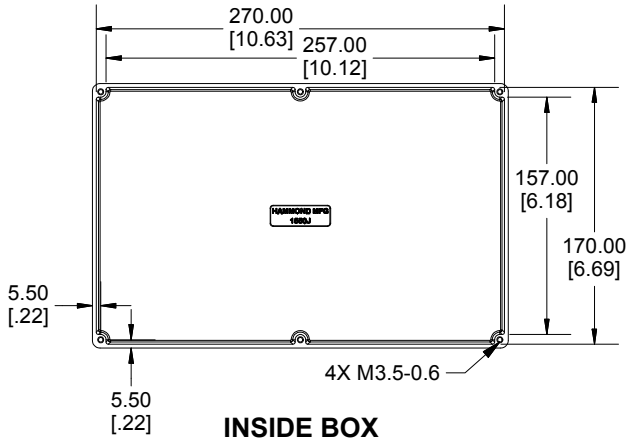

INSIDE BOX

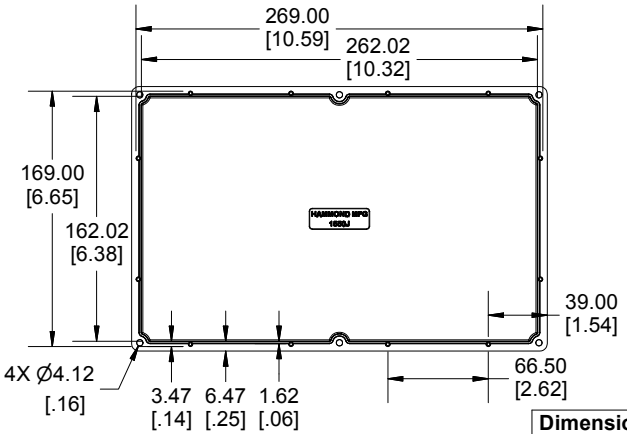

INSIDE LID

Dimensions:
mm
[inches]

Enclosures can be Factory Modified (Milling, Drilling, Printing etc.)
Contact Factory mjm@hammondmfg.com for quotes
Solid models of this enclosure available in STEP or IGES.

NOTE
Purchased assembly includes box, lid and 6 cover screws. Box and lid are made from Diecast Aluminum Alloy. EVA Gasket supplied with liquid resistant enclosure.

PART NUMBERS	
1550J Enclosure	
Natural Finish Enclosure	1550J
Black Textured Enclosure	1550JBK
1550J Liquid Resistant Enclosure (EVA Gasket)	
Natural Finish Enclosure	1550WJ
Black Textured Enclosure	1550WJBK
ACCESSORIES	
Recommended Torque: 75 ozf.in / 55 cN.m	
Standard Cover Screws	
Plated Cover Screws (Pkg 100) [M3.5-0.6 x 12mm]	1550MS100
Black Cover Screws (Pkg 100) [M3.5-0.6 x 12mm]	1550MS100BK
EVA Pre-formed Gasket Black	1550JEGASKET
Silicone Pre-formed Gasket Black	1550JSGASKET

HAMMOND MANUFACTURING®

1550J

www.hammondmfg.com