Technical Diagrams

815/816/817 Special parts

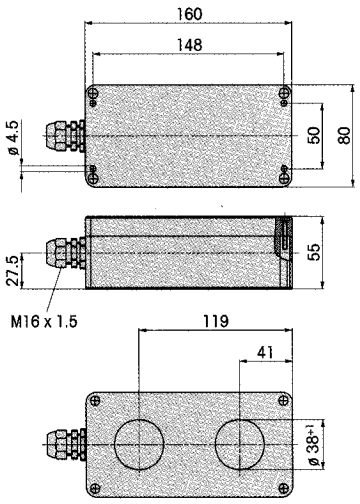

975 815 07 Double surface housing

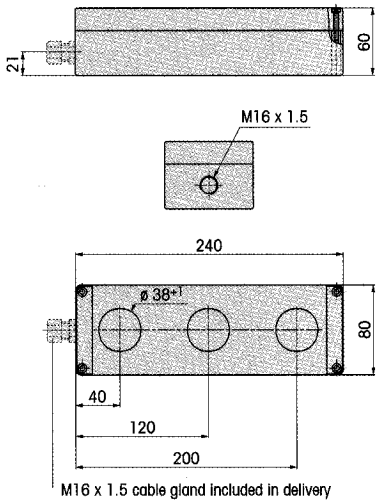

975 815 08 Triple surface housing

820 Flashing Beacon

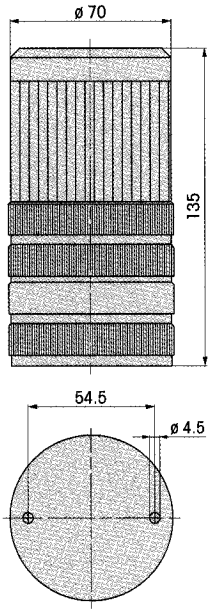

825 Flashing Beacon

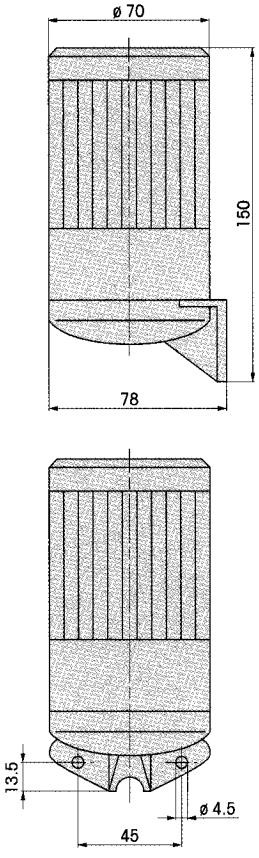

826/827/828 Permanent/ Blinking/Flashing Beacon

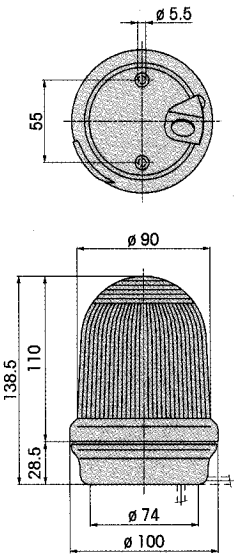

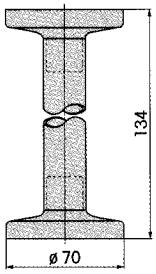

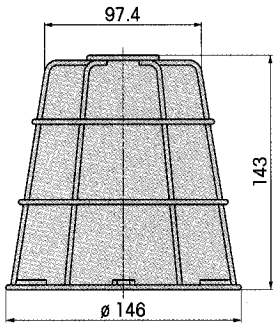

975 826 03 Wire guard

WERMA SIGNALTECHNIK