Brand of NTN corporation

Technical data

USPE208

Bearing units



Grey cast housing, radial insert ball bearing with socket set screws, single lip seal

KIT CONTENT

US.208.G2, PE208

VISUAL (S)

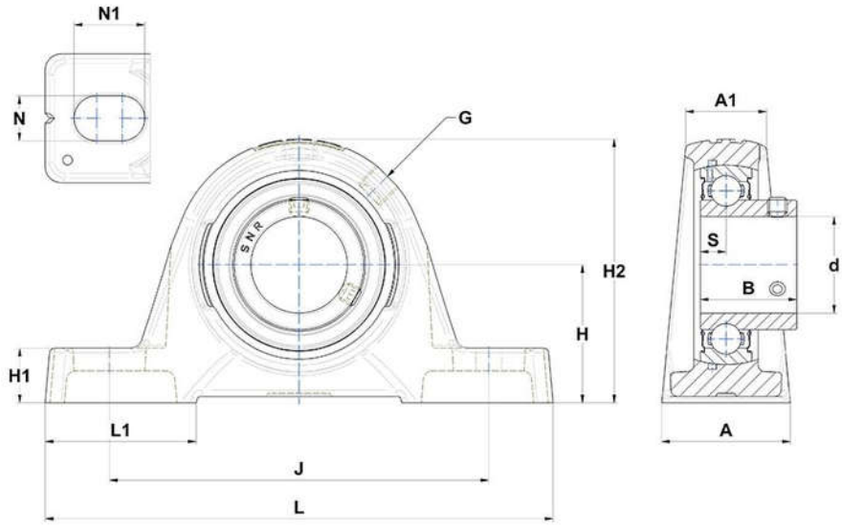

PRODUCT DEFINITION

Brand	SNR
A - Housing width	48 mm
A1 - Housing top width	30 mm
B - Width of Inner Ring	34 mm
d - Shaft diameter	40 mm
G - Grease fitting	R1/8"

NTN Europe
1 rue des Usines · BP 2017 · 74010 Annecy Cedex · France · Tel. +33 (0)4 50 65 30 00
S.A. au capital de 322 639 919 € · RCS ANNECY B 325 821 072 · Id. Fiscale : FR 48 325 821 072
SIRET 325 821 072 00015 · Code APE 2815 Z · Code NACE 28.15

PRODUCT DEFINITION	
H - Distance mounting base to centerline spheric. seating diam.	49,2 mm
H1 - Housing foot height	19 mm
H2 - Housing height	99 mm
J - Mounting holes distance	138 mm
L - Housing length	179 mm
L1 - Housing foot length	53 mm
N - Mounting hole dimension	14 mm
N1 - Mounting hole length	26 mm
S - Distance front side/bearing centre	9 mm

PRODUCT PERFORMANCE	
C - Dynamic load rating	29600000 mN
C0 - Static load rating	18200000 mN
Operating temperature min.	253,15 °K
Operating temperature max.	373,15 °K

OTHER FEATURES	
Mass	1,8 kg
Recommended tightening torque for set screw	11.5 N-m