Rope pull switch
Series SRM

Description **SRM-U1Z/U1Z-LU-175**	Article number **6012921089**

Operating symbol

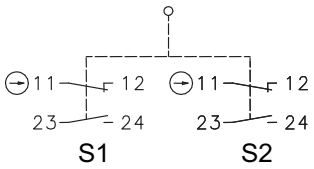

Operating diagram

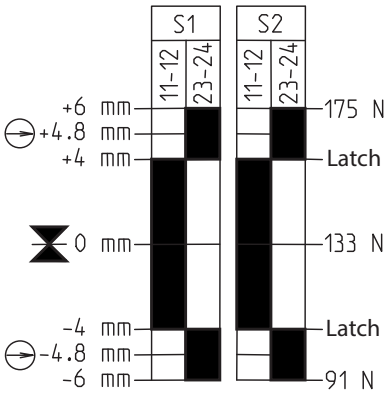

On Off

Tolerance:
Operating point ± 0,5 mm
Actuating force ± 15 %

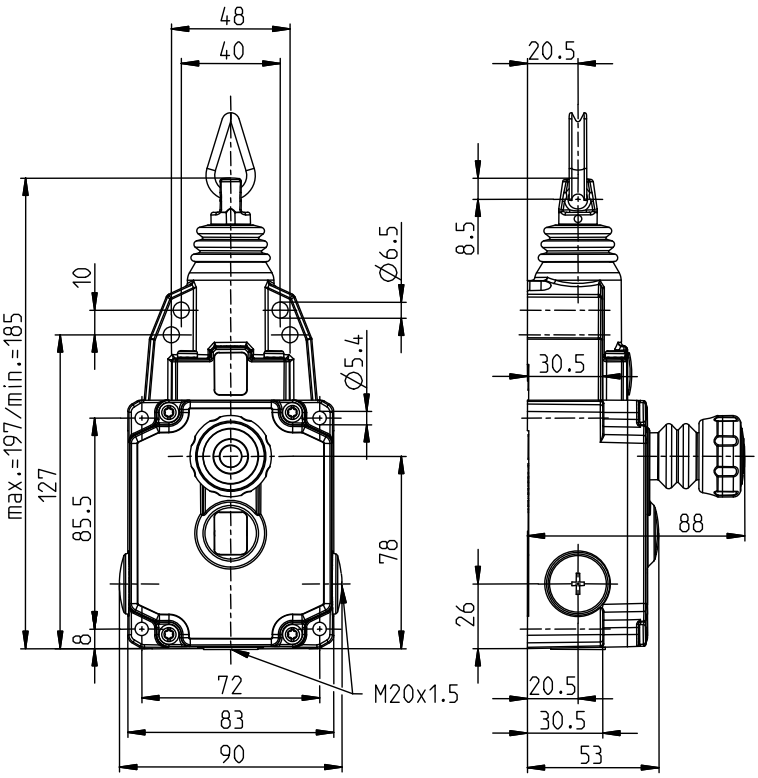

Electrical data		
Rated insulation voltage	U_i	250 V AC
Conv. thermal current	I_{the}	10 A
Rated operational voltage	U_e	240 V
Utilization category		AC-15, U_e /I_e 240 V / 3 A, U_e /I_e 120 V / 6 A DC-13, U_e /I_e 250 V / 0,27 A, U_e /I_e 125 V / 0,55 A
Direct opening action	⊖	acc. to IEC/EN 60947-5-1, Annex K
Short-circuit protective device		Fuse 6 A gG
Protection class		I

Technical modifications and errors excepted.
The technical datasheet corresponds to the technical state as of 2016-12-06 and will not be removed in case of changes.

Mechanical data	
Enclosure	Al-die cast
Cover	Al-die cast
Actuator	Pull ring (Zn-die cast)
Emergency Stop	PA, glass fibre reinforced
Ambient air temperature	-30 °C ... +80 °C (no freezing over/ no condensation)
Contact type	2 NC, 2 NO (Zb) (2 built-in switches S1+S2)
Latching device	acc. to IEC 60947-5-5, DIN EN 60947-5-5, ISO 13850 (DIN EN 418)
Reset facility	pull of the emergency stop acc. to IEC/EN 60947-5-5
Mechanical life	acc. to IEC 60947-5-5 max. 1 x 10^5 operating cycles
Rope length	≤ 37,5 m (depends on the max. temperature variation)
Rope Ø	D = Ø 2 - 5 mm
Switching frequency	≤ 20/min.
Assembly	4 x M6 or 4 x M5
Connection	8 screw terminals (M3,5)
Conductor cross-sections	Solid: 0,5 ... 1,5 mm^2 Litz wire with ferrules: 0,5 ... 1,5 mm^2
Cable entrance	3 x M20 x 1,5
Weight	≈ 0,77 kg
Installation position	Operator definable
Protection type	IP67 acc. to IEC/EN 60529

ID for safety engineering	
B10d	2 x 10^5 cycles

Standards	
	VDE 0660 T100, DIN EN 60947-1, IEC 60947-1
	VDE 0660 T200, DIN EN 60947-5-1, IEC 60947-5-1
	VDE 0660 T210, DIN EN 60947-5-5, IEC 60947-5-5
	ISO 13850
	DIN EN ISO 13849-1

EU Conformity	
	acc. to directive 2006/42/EC

Approvals	
	DGUV
	CCC
	$_{c}CSA_{US}$ A300

Notes
The degree of protection (IP code) specified applies solely to a property closed cover and the use of an equivalent cable gland with adequate cable. Maintenance-free installation. Rope with accessories is available on demand.

Technical modifications and errors excepted.
The technical datasheet corresponds to the technical state as of 2016-12-06 and will not be removed in case of changes.