THE INFORMATION CONTAINED IN THIS DRAWING IS THE SOLE PROPERTY OF L-COM, INC. ANY REPRODUCTIONS IN PART OR WHOLE WITHOUT THE WRITTEN PERMISSION OF L-COM, INC. IS PROHIBITED.

REVISIONS			
REV	DESCRIPTION	DATE	CHANGED BY
A	CN INITIAL RELEASE	11/04/15	S.LI
B	ECN 8470;PER VENDOR DWG UPD HOUSING,LOAD BAR ,SEPARATOR,NOTES,UPD DWG FORMAT	09/07/16	D.CUI

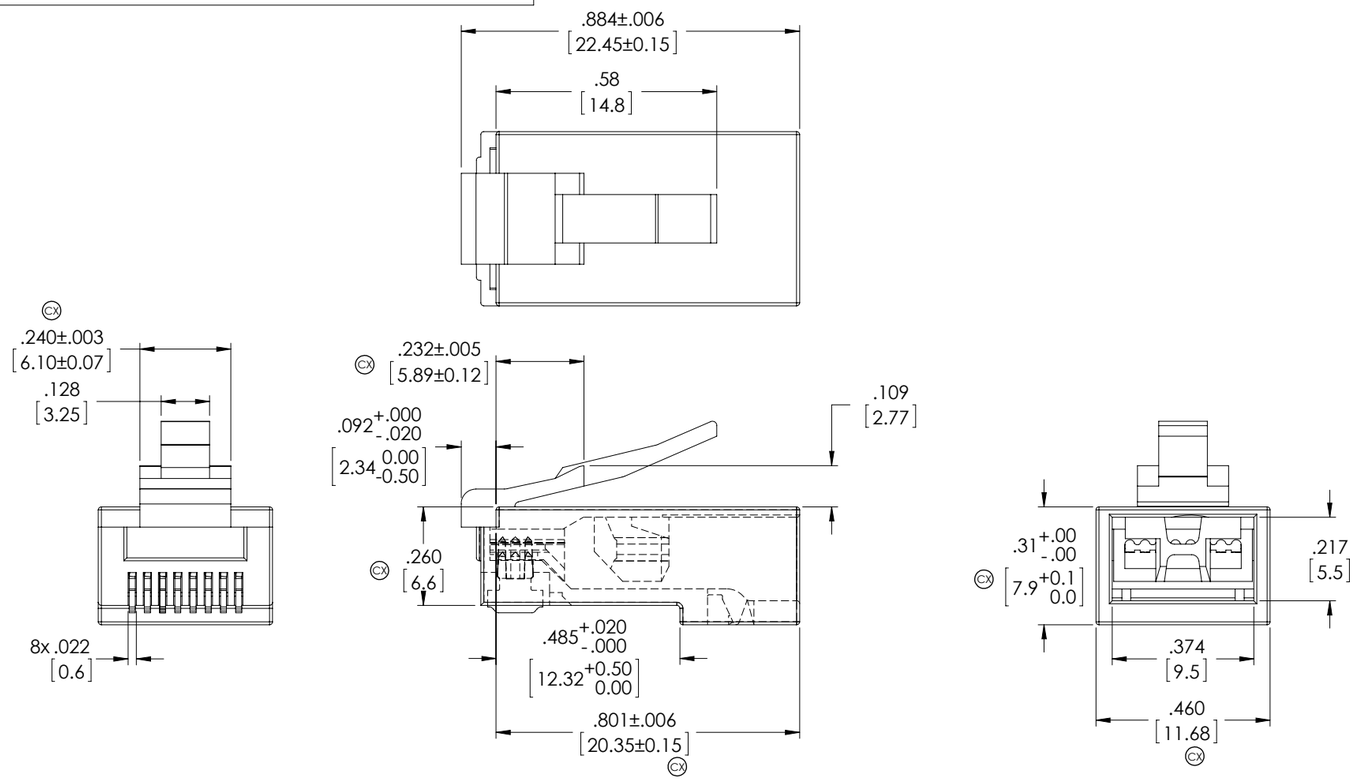

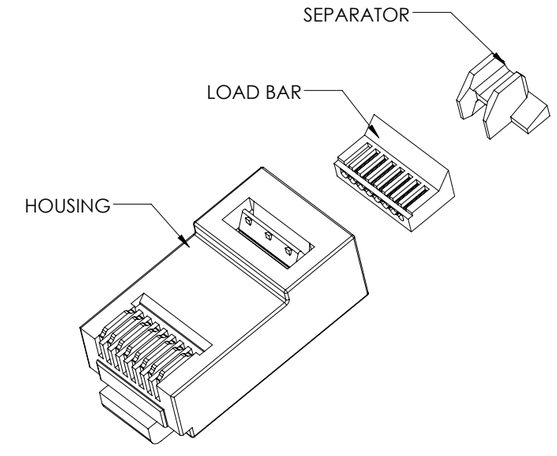

LOAD BAR

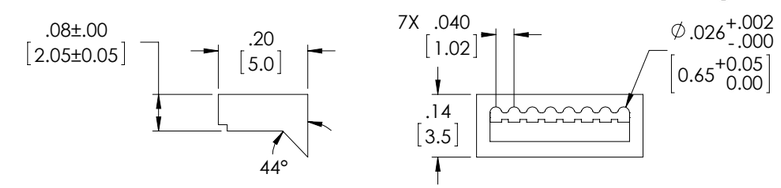

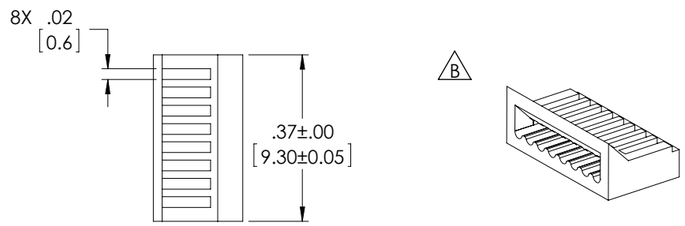

SEPARATOR

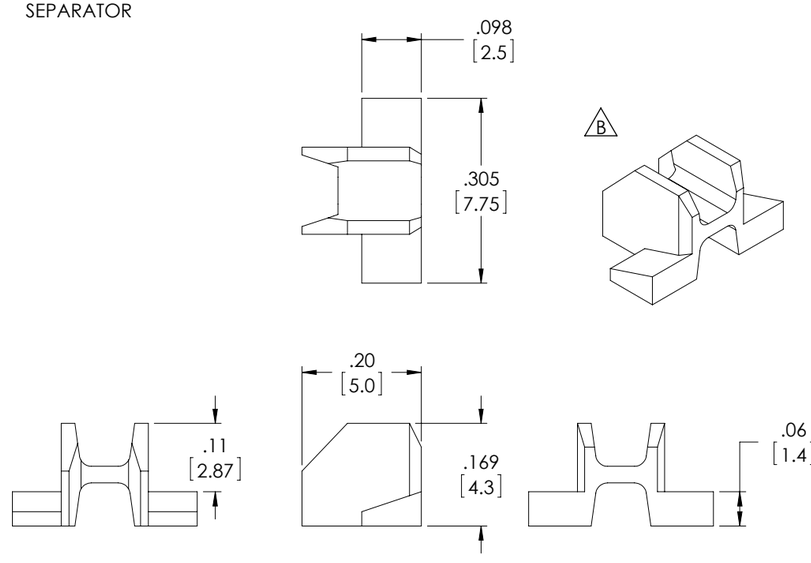

NOTES

MATERIAL :
CONTACT: COPPER ALLOY; 50U" GOLD OVER NICKEL PLATED
HOUSING,LOAD BAR&SEPARATOR: PC,UL94 V-0; COLOR:TRANSPARENT

ELECTRICAL :
VOLTAGE: 250V AC, CURRENT: 2A MAX.
CONTACT RESISTANCE:20mΩ MAX.
DIELECTRICAL WITHSTANDING VOLTAGE:1000V DC/MIN
INSULATION RESISTANCE: 500MΩ MIN. @ 1000V DC

MISCELLANEOUS:
OPERATING TEMPERATURE RANGE: -40°C TO +125°C
STORAGE TEMPERATURE RANGE: -25°C TO +75°C
PLUG DESIGNED FOR CATEGORY 6 APPLICATION
PARTS SHALL COMPLY WITH TIA-1096 STANDARD
CONDUCTOR RANGE:STRANDED OR SOLID WIRE,28 AWG
CONDUCTOR INSULATION DIAMETER : 0.7~0.75MM
CX PRESENT CRITICAL DIMENSIONS

REGULATORY COMPLIANCE:
CE2011/65/EU(RoHS DIRECTIVE)

UNLESS OTHERWISE SPECIFIED, DIMENSIONS ARE IN INCHES [mm]

DIMENSIONAL TOLERANCES:
..X = ±.1 [2.54]
.XX = ±.01 [.25]
.XXX = ±.005 [.13]

ANGULAR TOLERANCES:
ALL = ± 1°

PROJECTION

APPROVALS	DATE
DRAWN BY S.LI	11/04/2015
CHECKED BY B.ZHANG	11/04/2015
APPROVED BY S.PAN	11/04/2015

CONFIGURATION DETAILS OF UNDIMENSIONED FEATURES MAY VARY

COLOR VARIATIONS MAY OCCUR

L-COM Global Connectivity
50 HIGH STREET
NORTH ANDOVER, MA
01845

CATEGORY: MODULAR

PRODUCT DESCRIPTION: CAT6 RJ45 8P8C UNSHIELD PLUG

SIZE	FSCM NO.	DWG. NO.	REV.
B	43321	TSP8028C6	B

SCALE: 1:1 | CAD FILE: TSP8028C6.SLDDRW | SHEET 1 OF 1