268 HANDHELD CASES
292 UNIVERSAL PLASTIC ENCLOSURES
317 HEAVY DUTY AND ELECTRICAL ENCLOSURES
341 DESKTOP AND INSTRUMENT CASES
369 VERSATILE IOT AND SENSOR ENCLOSURES

62 Series Plastic Keyfob Enclosure

Product overview

Contemporary range of small robust handheld boxes with ergonomic rounded edges.

- Moulded in high impact ABS
- Snap-fit assembly
- Recesses in lid and base for membrane keypads or overlays
- Excellent properties for machining
- Keyring lug style available
- 62 series has been designed to meet the requirements of IP54 or additionally, IP65 with the optional gasket accessory





SPECIFICATION	
Material	Base and lid high impact ABS UL94-V0
Operating temperature	Resistant to temperatures of up to 80°C
Protection class	62 series has been designed to meet the requirements of IP54 or additionally, IP65 with the optional gasket accessory
Standard colours	Light grey similar to RAL 7035 Black similar to RAL 9004
Standard unit includes	Base and lid
Options	IP65 gasket

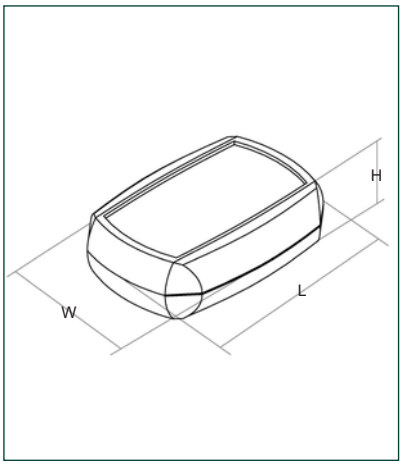

BLACK	LIGHT GREY	LENGTH	WIDTH	HEIGHT	STYLE
CHH621BLK	CHH621GRY	55mm	40mm	18mm	-
CHH622BLK	CHH622GRY	60mm	40mm	18mm	Keyring lug
CHH623BLK	CHH623GRY	70mm	50mm	20mm	-

KEY FEATURES

High impact ABS | Snap-fit assembly | Keyring lug style available

ACCESSORIES

62 series IP65 gasket

- IP65 protection



PART NO.	DESCRIPTION
CHH62GASK	62 series IP65 gasket

+44 (0)1638 716101 | sales@camdenboss.com | www.camdenboss.com

We operate a constant improvement policy, our products are subject to change without notice.

Vers 1

bsi ISO 9001 Quality Management Systems CERTIFIED FM 28614