NOTES

MATERIAL: -DIECAST ALUMINUM ALLOY.
-FOUR 6-32 Phillips screws

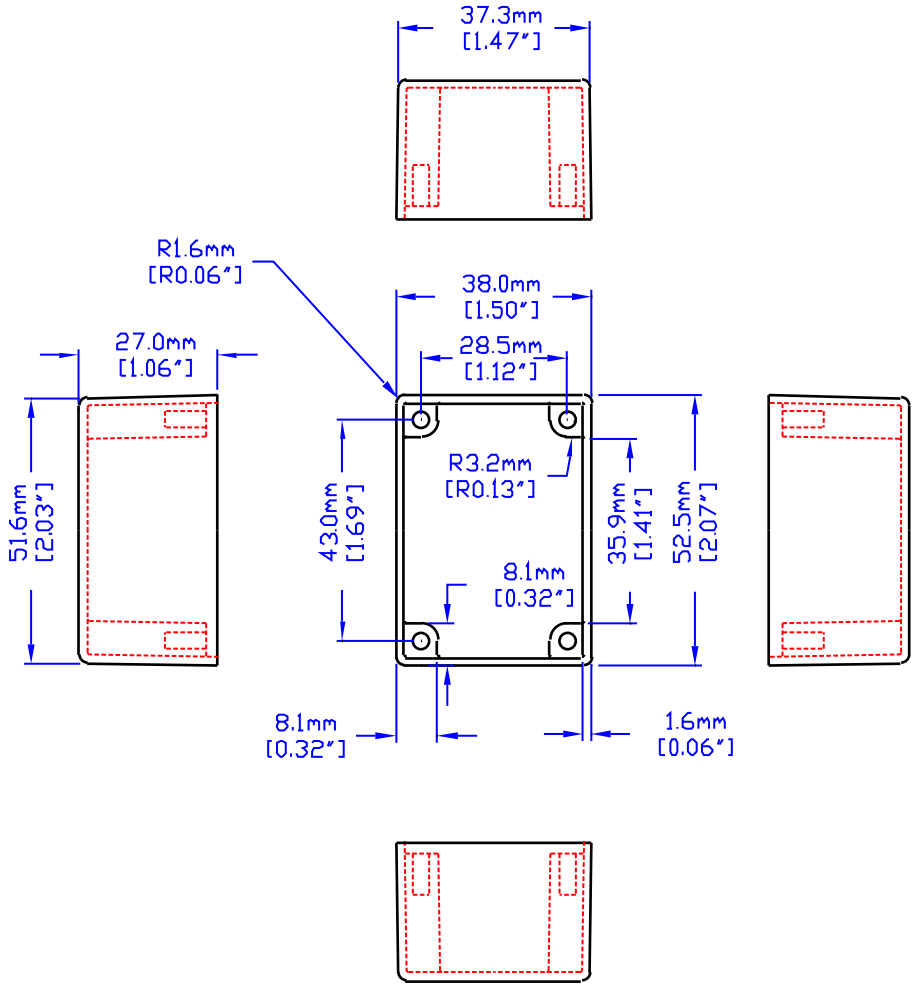

VIEW OF BOX (LID REMOVED)

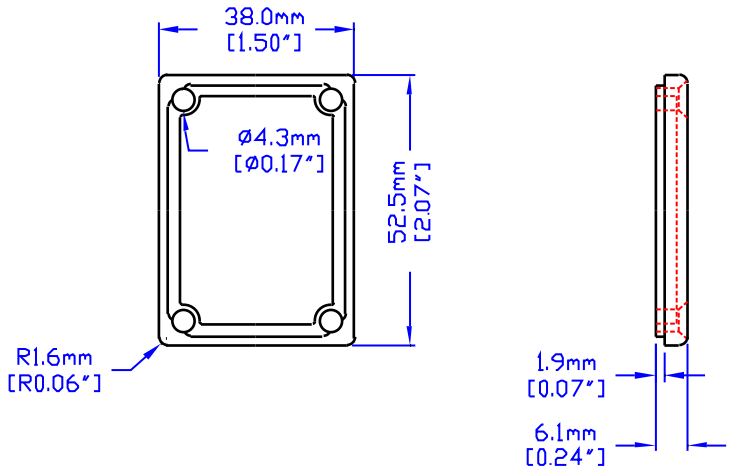

VIEW INSIDE LID

HAMMOND MANUFACTURING

11451PSLA

CANADA – PH (519) 886 7170 – FAX (519) 886 8311
U.S.A. – PH (716) 631 5700 – FAX (716) 631 1156