E10752

Damping magnet

MAGNET M4.0 HARD FERRITE

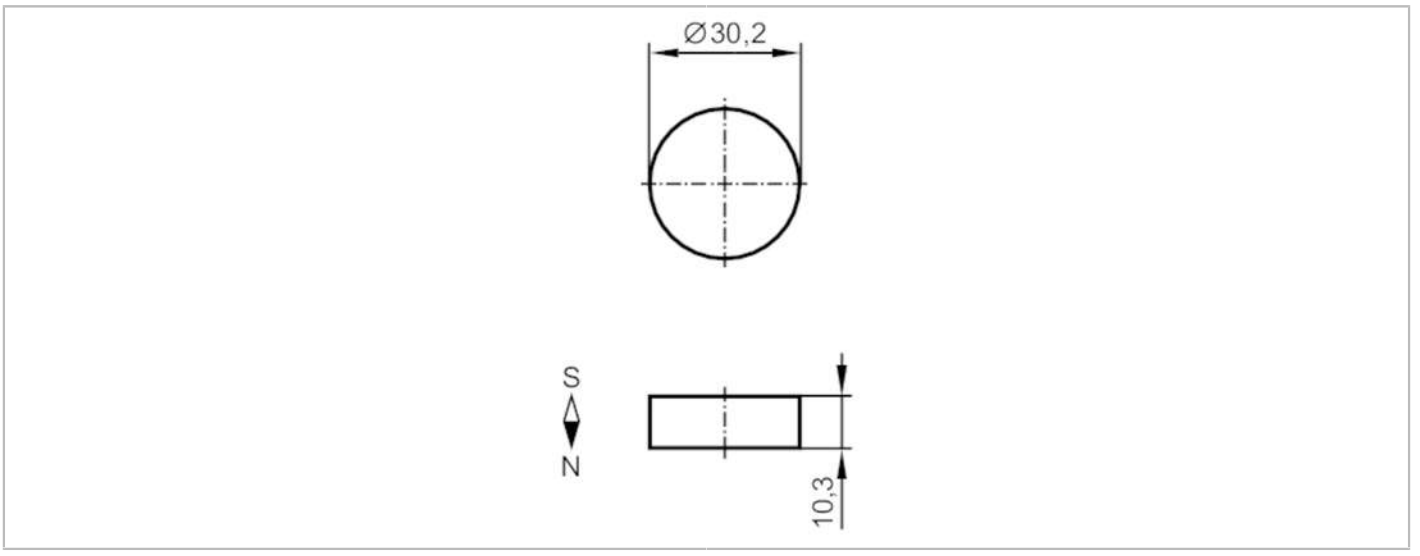

Operating conditions		
Ambient temperature	[°C]	-25...250
Mechanical data		
Weight	[g]	37
Dimensions	[mm]	Ø 30 / L = 10
Materials		hard ferrite HF 24/23
Magnetic field strength	[mT]	80
Remarks		
Pack quantity		1 pcs.