30809-670 HF FRAME TYPE PLUG-IN UNIT BODY TUBE, 28 HP, FOR 220 MM DEEP PCB

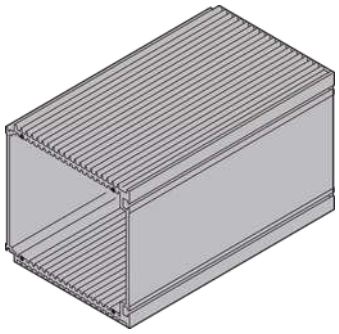

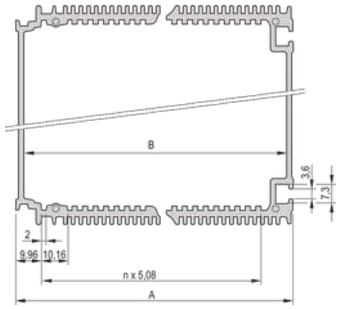

KEY FEATURES

- The black HF body tube, for HF frame-type plug-in unit enables a user to insert PCBs
- The tube offers a shielding against high-frequency radiation
- Module body with cooling Fins
- Plug-in unit can be mounted in a subrack or fitted laterally to a mounting plate with the slide nut

PRODUCT ATTRIBUTES

- Product Type: Cover
- Works With: Cassettes
- Rack Height: 3 U
- Rack Width: 28 HP
- Length: 220 mm
- Package Quantity: 5

ADDITIONAL PRODUCT DETAILS

The black HF body tube, for HF frame-type plug-in unit enables a user to insert PCBs.

Please order front Panel, rear Panel, brackets for PCBs and fixing materials separately.

Please take into consideration that deliveries may be carried out in the stated SPQs (SPQ, e.g. 5 pieces, 10 pieces, 50 pieces, etc.). Differing order quantities (e.g. 2 pieces) may be changed to the next possible delivery quantity = Standard Pack Quantity.

CERTIFICATIONS



North America
All locations
+1.763.422.2661
Chat with us:
schroff.nvent.com

Europe
Straubenhardt, Germany
+49.7082.794.0
Betschdorf, France
+33.3.88.90.64.90
Warsaw, Poland
+48.22.209.98.35
Assago, Italy
+39.02.932.7141
Chat with us:
schroff.nvent.com

Asia
Shanghai, China
+86.21.2412.6943
Qingdao, China
+86.532.8771.6101
Singapore
+65.6768.5800
Shin-Yokohama, Japan
+81.45.476.0271
Chat with us:
schroff.nvent.com

Middle East & India
Dubai, United Arab Emirates
+971.4.378.1700
Bangalore, India
+91.80.6715.2001
Istanbul, Turkey
+90.216.250.7374
Chat with us:
schroff.nvent.com



Our powerful portfolio of brands:
nVent.com **CADDY ERICO HOFFMAN RAYCHEM SCHROFF TRACER**

© 2024 nVent. All nVent marks and logos are owned or licensed by nVent Services GmbH or its affiliates. All other trademarks are the property of their respective owners.

nVent reserves the right to change specifications without notice.