THE INFORMATION CONTAINED IN THIS DRAWING IS THE SOLE PROPERTY OF L-COM, INC. ANY REPRODUCTION IN PART OR WHOLE WITHOUT THE WRITTEN PERMISSION OF L-COM, INC. IS PROHIBITED.

REVISIONS			
REV	DESCRIPTION	DATE	APPROVED
A	REV A DRAWING RELEASED	09/25/2018	DFRISIELLO

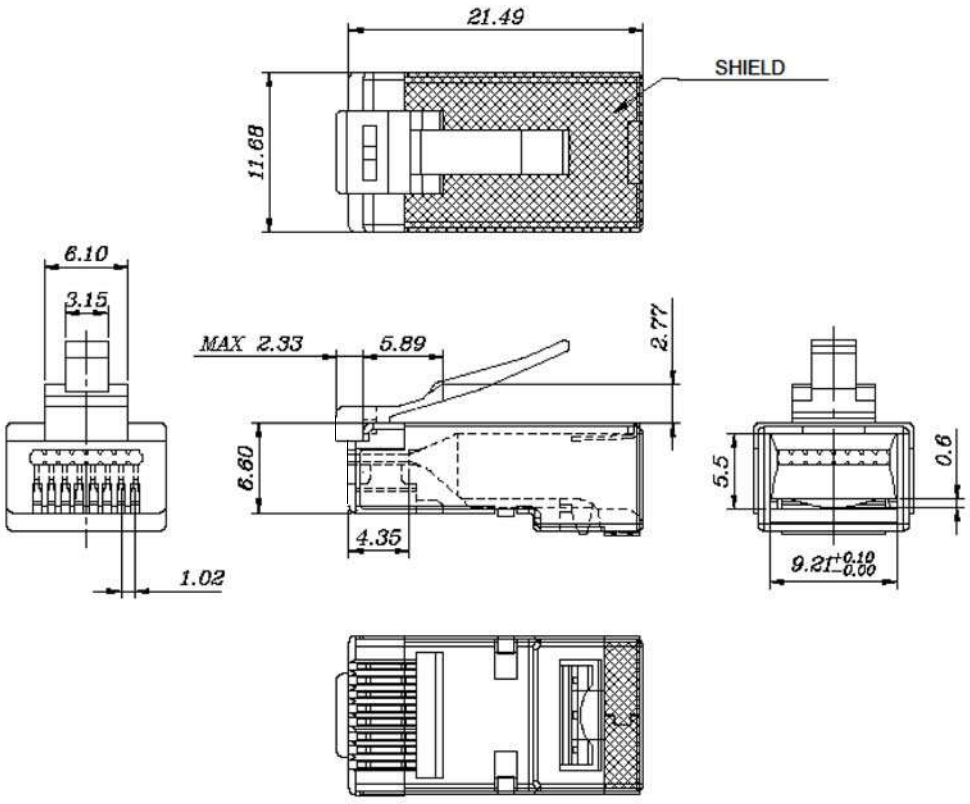

SPECIFICATIONS:

1. ELECTRICAL:
UL APPLICATIONS: 250 VOLTS AC MAX., AT 2 AMPS
DIELECTRIC WITHSTANDING VOLTAGE: 1000 VOLTS AC
WITH STAND VOLTAGE TIME: 60S
INSULATION RESISTANCE: 100 MΩ
TERMINATION RESISTANCE: 20MΩ MAX AFTER
ENVIRONMRNTAL TESTING.

2. MECHANICAL:
CABLE-TO-PLUG TENSILE STRENGTH: 20 POUND MIN.
DURABILITY: 200 MATING CYCLES

3. MATERIAL & FINISH:
HOUSING: POLYCARBONATE, UL94V-0 OR UL94V-2
COLOR: TRANSPARENT
CONTACT BLADE: COPPER ALLOY
CONDUCTOR: STRANDED OR SOLID WIRE, 24AWG, 26AWG
(O.D. WIRE FROM .037 [.96] TO .040 [1.02])
GOLD PLATING: 50µ"
SHIELDING SHELL: COPPER ALLOY

NOTES:

ALL DIMENSIONS ARE FOR REFERENCE ONLY.

PLUG SHALL BE PACKAGED IN BULK, 100 PIECES PER BAG IN ACCORDANCE WITH L-COM SPECIFICATION PS-0031.

REGULATORY COMPLIANCE:
CE2011/65/EU(RoHS DIRECTIVE)

UNLESS OTHERWISE SPECIFIED,
DIMENSIONS ARE IN INCHES [mm]
OVERALL CABLE LENGTH TOLERANCE:
≤12 [305] = +1 [25] / -0
>12 [305] ≤60 [1524] = +2 [51] / -0
>60 [1524] ≤120 [3048] = +4 [102] / -0
>120 [3048] ≤300 [7620] = +6 [152] / -0
>300 [7620] = +5% / -0%
ALL OTHER DIMENSIONAL TOLERANCES:
.X = ± .2 [5.08]
.XX = ± .02 [.51]
.XXX = ±.005 [.13]
PROJECTION

APPROVALS	DATE
DRAWN BY DFRISIELLO	09/21/2018
CHECKED BY DGUTTADAURO	09/25/2018
APPROVED BY DGUTTADAURO	09/25/2018

CONFIGURATION DETAILS OF UNDIMENSIONED FEATURES MAY VARY

COLOR VARIATIONS MAY OCCUR

L-COM Global Connectivity
50 HIGH STREET
NORTH ANDOVER, MA
01845

CATEGORY
TELECOM/MODULAR

PRODUCT DESCRIPTION
Pull Through RJ45 Plug Cat6 Shielded

SIZE	FSCM NO.	DWG. NO.	REV.
A	43321	TDPTC6S	A

SCALE: NONE | CAD FILE: TDPTC6S.SLDDRW | SHEET 1 OF 1