KSC9 Series
SMD Sealed Tact Switch for Adjustable Height

NEW!

Features/Benefits

- ***SMD switch***
- ***Adjustable height with buttons***
- ***Overload resistance***
- ***Tape & reel***
- ***IP 67***

Typical Applications

- ***Industrial electronics***
- ***Network equipment***
- ***Telecommunications***



Specification

FUNCTION: momentary action
CONTACT ARRANGEMENT: 1 make contact = SPST, N.O.
TERMINALS: J bend or Gullwing type for SMT
CONTACT ARRANGEMENT: 1 make contact = SPST, N.O.

Mechanical

Type	Force (N)	Operating Life (operations)	Travel (mm)
KSC921J LFS	1.7 ± 0.5	300,000	0.4 ± 0.2
KSC931J LFS	2.55 ± 0.65	300,000	0.4 ± 0.2
KSC941J LFS	3.4 ± 0.85	300,000	0.4 ± 0.2

BUTTON INSETION OVERLOAD: 40N
BUTTON RETENTION FORCE: 7N min between -40°C/+85°C

Electrical

	Silver	Gold
MAXIMUM POWER:	1 VA	0.2 VA
MAXIMUM VOLTAGE:	32 VDC	32 VDC
MINIMUM VOLTAGE:	20 mV	20 mV
MAXIMUM CURRENT:	50 mA	10 mA
MINIMUM CURRENT:	1 mA	1 mA

DIELECTRIC STRENGTH (50 Hz, 1 min.): > 250 Vrms
CONTACT RESISTANCE: < 100 mΩ
INSULATION RESISTANCE (100 V initial stage): > 10^9 Ω
BOUNCE TIME: < 1 ms

Environmental

	Silver	Gold
OPERATING TEMPERATURE:	-40˚C to 85˚C	-40˚C to 125˚C
STORAGE TEMPERATURE:	-55˚C to 85˚C	-55˚C to 125˚C

Process

SOLDERING: Depending on the application, this component is suited to the following methods:

– Cleaning according to typical washing processes.
– Infrared Reflow Soldering in accordance with IEC 61760-1.
MSL level: 2a

Packaging

In reels of 750 pieces.
Dimensions of reels according to EIA RS481 or IEC 2863.
External diameter 330 mm ± 2 mm.

NOTE: This product is designed and manufactured for general electronic devices. For systems where reliability and safety are required, please contact your sales representative to secure product integration and function to secure usage.

How To Order

Our easy build-a-switch concept allows you to mix and match options to create the switch you need. To order, select desired option from each category and place it in the appropriate box.
For any part number different from those listed above, please consult your local representative.

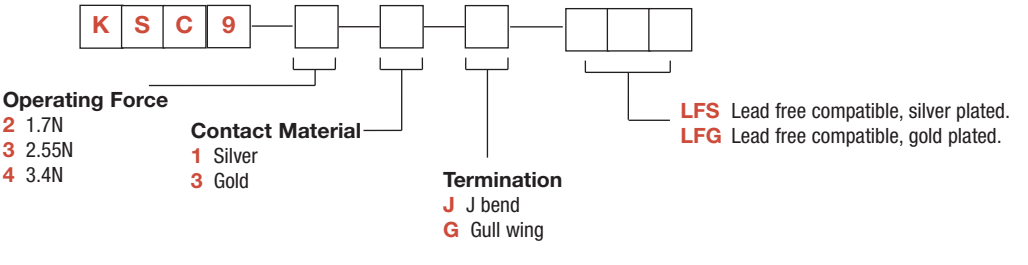

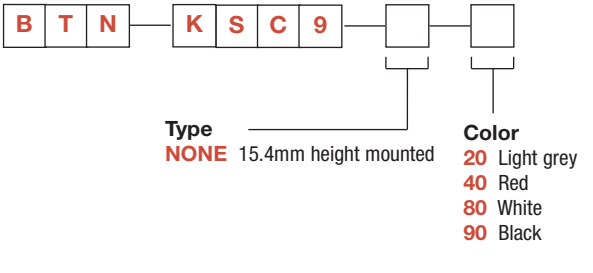

Dimensions are shown: mm
Specifications and dimensions subject to change

NEW!

KSC9 Series
SMD Sealed Tact Switch for Adjustable Height

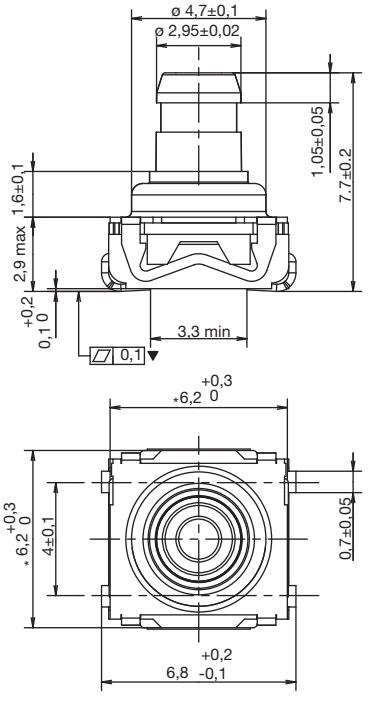

TERMINATION

J **J BEND**

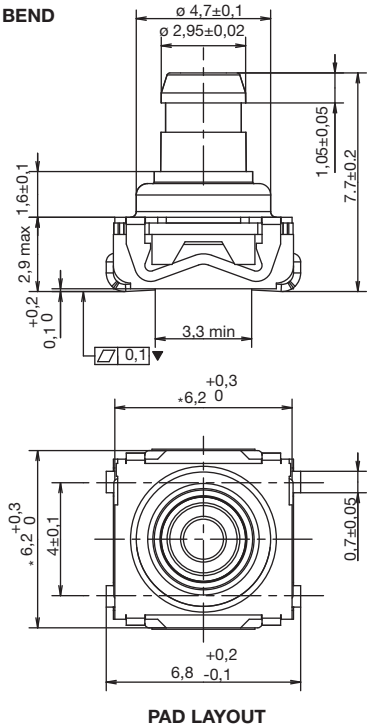

PAD LAYOUT

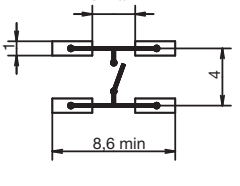

G **GULLWING**

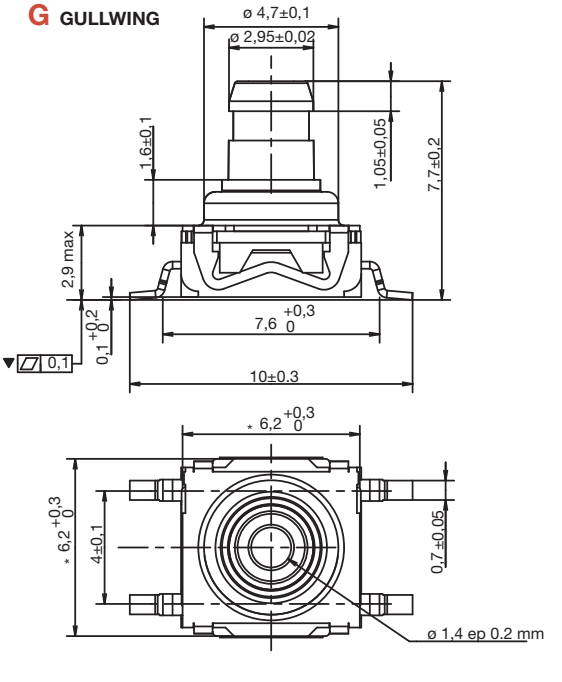

PAD LAYOUT

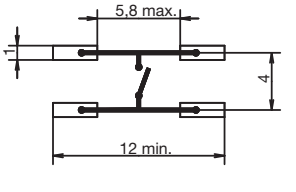

Dimensions are shown: mm
Specifications and dimensions subject to change

KSC9 Series
SMD Sealed Tact Switch for Adjustable Height

NEW!

KSC9 BUTTON

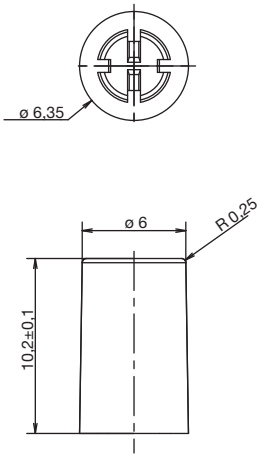

INTEGRATION

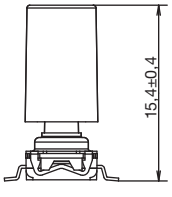

SWITCH WITH CAP

TAPE AND REEL

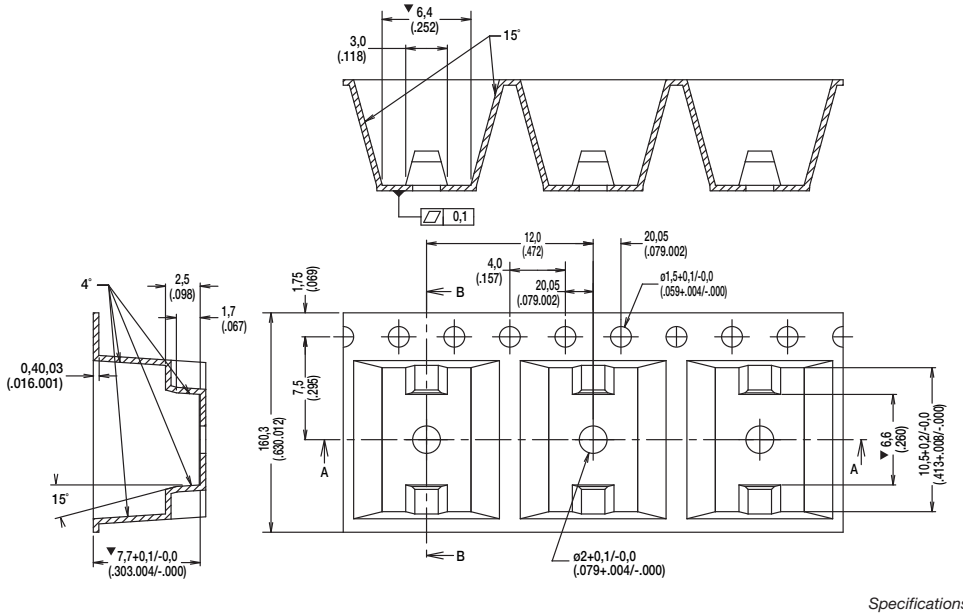

Dimensions are shown: mm
Specifications and dimensions subject to change