Rear eye MP6, Series CM1

2798060500

AVENTICS Rear eyes



Technical data

Industry	Industrial
Version	With ball joint and foot Corrosion-resistant version
Piston diameter	50 mm
Weight	0.2 kg

Material

Material	Aluminum (forged and anodized)
Screws material	Stainless Steel
Bearing material	Stainless Steel
Bearing material, inner ring	Stainless Steel
Bearing material, outer ring	Stainless steel with PTFE coating
Part No.	2798060500

Rear eye MP6, Series CM1

2798060500

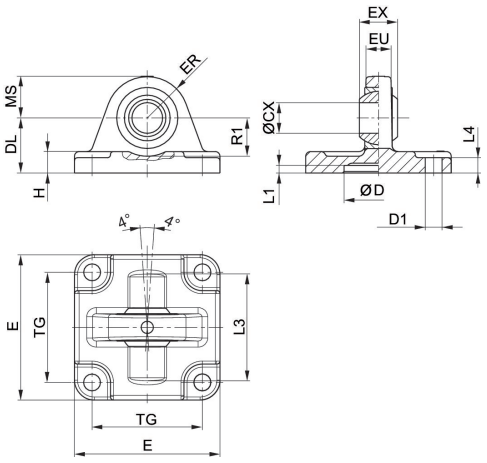

Scope of delivery: clevis incl. mounting screws

Part No.	Piston Ø	ØCX H7	ØD H11	ØD1 H13	DL ±0,2	E	EX –0,1	ER	EU
2798060320	32	10	30	6,6	22	46	14	17	12,5
2798060400	40	12	35	6,6	25	52	16	20	12
2798060500	50	12	40	9	25	62	16	22	14
R412025637	50	16	40	9	27	64	21	22	14
2798060630	63	16	45	9	32	74	21	25	15
2798060800	80	16	45	11	36	94	21	30	17
R412025638	80	20	45	11	36	94	25	30	17
2798061000	100	20	55	11	41	114	25	32	20
R412025572	125	30	60	13.5	50	138	37	-	25

Part No.	Piston Ø	H	L1 min.	L3	L4	MS -0,5	R1 min.	TG
2798060320	32	6.5	4.5	–	5,5	15,5	16,5	32,5
2798060400	40	8	4.5	–	5,5	18	19,5	38
2798060500	50	9	5	46,5	6,5	24	18,5	46,5
R412025637	50	9	4.5	48	6.5	21	19	46,5
2798060630	63	11	4,5	–	6,5	23	25,5	56,5
2798060800	80	12	4,5	–	10	30	26	72
R412025638	80	12	4.5	70	10	28	24	72
2798061000	100	15	4,5	–	10	30	31	89
R412025572	125	-	7	-	10	40	32	110 ±0,3