DATASHEET - LS-XWA-ZBZ



Actuator, angled, long

Part no.	**LS-XWA-ZBZ**
Catalog No.	**106838**
Eaton Catalog No.	**LS-XWA-ZBZ**
EL-Nummer (Norway)	**0004356184**

Delivery program

Basic function			actuators
Part group reference			LS…ZBZ/X
Function			Angled actuator
Description			Long Stainless steel
For use with			For swing doors above 550 mm width
Notes for combination with LS-...ZBZ/X basic devices From width: 500 mm			

Technical data

General

Standards			IEC/EN 60947
Climatic proofing			Damp heat, constant, to IEC 60068-2-78; damp heat, cyclical, to IEC 60068-2-30
Mounting position			As required
Terminal capacities		mm^2	
Solid		mm^2	1 x (0.75 - 2.5) 2 x (0.75 - 1.5)
Flexible with ferrule		mm^2	1 x (0.5 - 1.5) 2 x (0.5 - 1.5)

Contacts/switching capacity

Rated impulse withstand voltage	U_{imp}	V AC	4000
Rated insulation voltage	U_i	V	400
Overvoltage category/pollution degree			III/3
Rated operational current	I_e	A	
AC-15			
24 V	I_e	A	6
220 V 230 V 240 V	I_e	A	6
380 V 400 V 415 V	I_e	A	4
DC-13			
24 V	I_e	A	3
110 V	I_e	A	0.8
220 V	I_e	A	0.3
Supply frequency		Hz	max. 400
Short-circuit rating to IEC/EN 60947-5-1			
max. fuse		A gG/gL	6
Repetition accuracy		mm	0.02

Mechanical variables

Mechanical shock resistance (half-sinusoidal shock, 20 ms)			
Standard-action contact		g	10
Operating frequency	Operations/h		≦ 800

Actuation

Mechanical			
Mechanical holding force acc. to GS-ET-19 (04/2004)			
XG, XW, XNG		N	1700
XWA, XFG, XF		N	1600
XNW		N	1200
Electromechanical			
For magnet			

Power consumption			
at 120 V AC		VA	8
at 24 V DC		W	8
Pick-up and drop-out values		x U_s	0.85 - 1.1
Magnet duty factor		% ED	100

Design verification as per IEC/EN 61439

Technical data for design verification			
Rated operational current for specified heat dissipation	I_n	A	0
Heat dissipation per pole, current-dependent	P_{vid}	W	0
Equipment heat dissipation, current-dependent	P_{vid}	W	0
Static heat dissipation, non-current-dependent	P_{vs}	W	0
Heat dissipation capacity	P_{diss}	W	0
Operating ambient temperature min.		°C	-25
Operating ambient temperature max.		°C	40
IEC/EN 61439 design verification			
10.2 Strength of materials and parts			
10.2.2 Corrosion resistance			Meets the product standard's requirements.
10.2.3.1 Verification of thermal stability of enclosures			Meets the product standard's requirements.
10.2.3.2 Verification of resistance of insulating materials to normal heat			Meets the product standard's requirements.
10.2.3.3 Verification of resistance of insulating materials to abnormal heat and fire due to internal electric effects			Meets the product standard's requirements.
10.2.4 Resistance to ultra-violet (UV) radiation			Please enquire
10.2.5 Lifting			Does not apply, since the entire switchgear needs to be evaluated.
10.2.6 Mechanical impact			Does not apply, since the entire switchgear needs to be evaluated.
10.2.7 Inscriptions			Meets the product standard's requirements.
10.3 Degree of protection of ASSEMBLIES			Does not apply, since the entire switchgear needs to be evaluated.
10.4 Clearances and creepage distances			Meets the product standard's requirements.
10.5 Protection against electric shock			Does not apply, since the entire switchgear needs to be evaluated.
10.6 Incorporation of switching devices and components			Does not apply, since the entire switchgear needs to be evaluated.
10.7 Internal electrical circuits and connections			Is the panel builder's responsibility.
10.8 Connections for external conductors			Is the panel builder's responsibility.
10.9 Insulation properties			
10.9.2 Power-frequency electric strength			Is the panel builder's responsibility.
10.9.3 Impulse withstand voltage			Is the panel builder's responsibility.
10.9.4 Testing of enclosures made of insulating material			Is the panel builder's responsibility.
10.10 Temperature rise			Not applicable.
10.11 Short-circuit rating			Is the panel builder's responsibility. The specifications for the switchgear must be observed.
10.12 Electromagnetic compatibility			Is the panel builder's responsibility. The specifications for the switchgear must be observed.
10.13 Mechanical function			The device meets the requirements, provided the information in the instruction leaflet (IL) is observed.

Technical data ETIM 7.0

Sensors (EG000026) / Actuator for position switch with separate actuator (EC001487)			
Electric engineering, automation, process control engineering / Binary sensor technology, safety-related sensor technology / Position switch / Actuator for position switch with separate actuator (ecl@ss10.0.1-27-27-06-05 [BAA078012])			
Model			Actuator with vertical mounting

Approvals

Product Standards			IEC/EN 60947-5; UL 508; CSA-C22.2 No. 14; CE marking
UL File No.			E29184
UL Category Control No.			NKCR
CSA File No.			12528
CSA Class No.			3211-03
North America Certification			UL listed, CSA certified

Dimensions

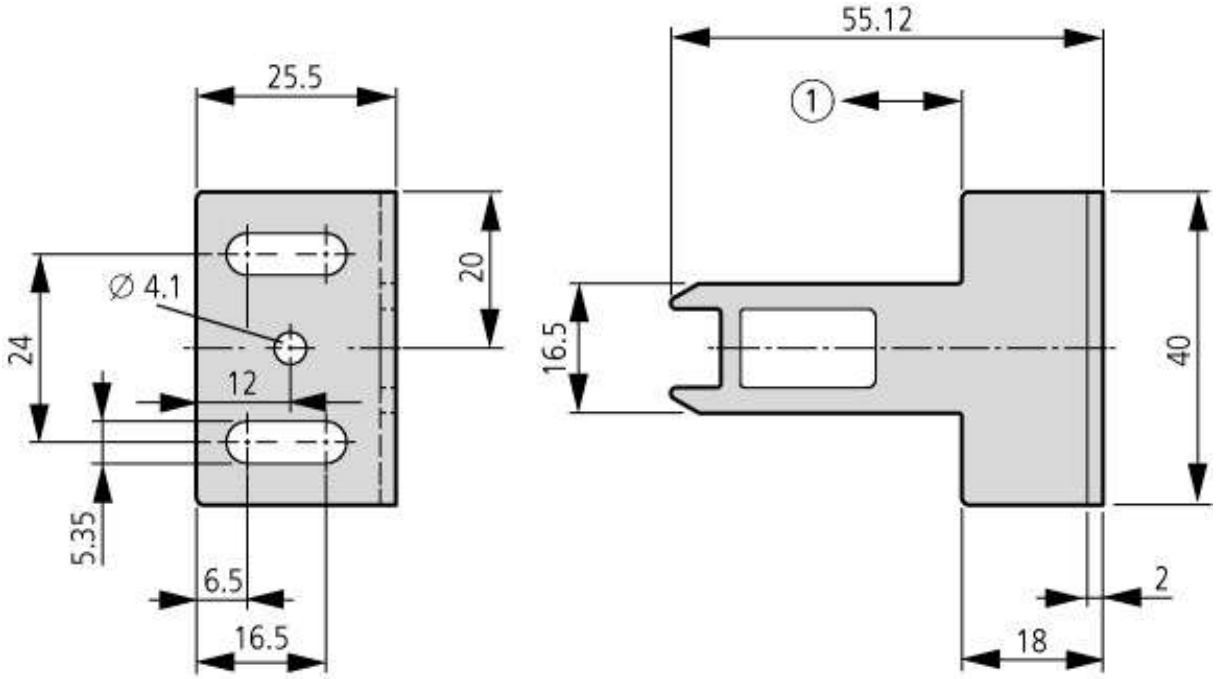

pin with a 4 mm pin after mounting
① Distance to device head = 0.1 … 3.0 mm

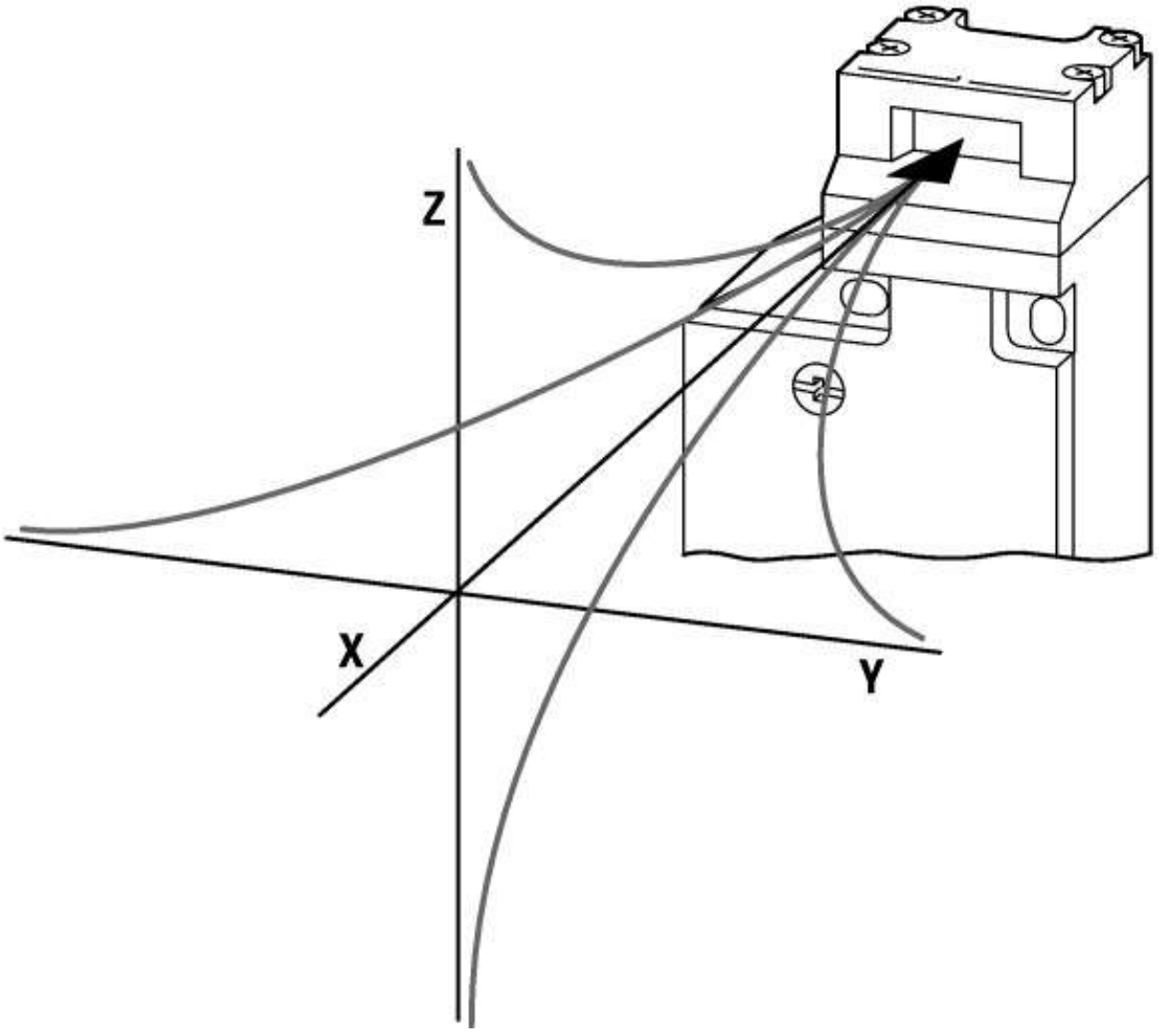

Additional product information (links)

IL05208005Z (AWA1310-2354) Safety position switch

IL05208005Z (AWA1310-2354) Safety position switch	ftp://ftp.moeller.net/DOCUMENTATION/AWA_INSTRUCTIONS/IL05208005Z2018_05.pdf

© 11/2018 by Eaton Industries GmbH