310.853.001.0516AK

WERMA SIGNALTECHNIK 853, 153

EN 60947-5-1

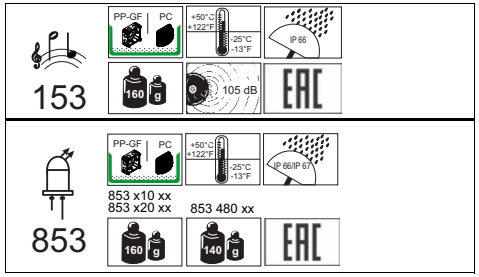

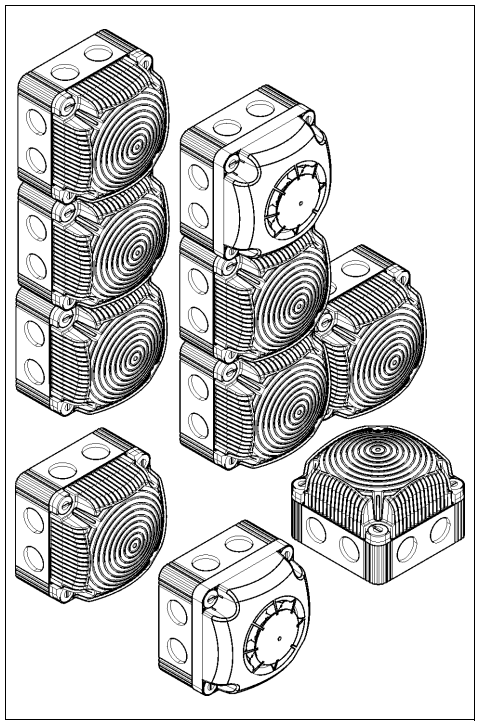

310.853.001.0516AK © (D)

WERMA SIGNALTECHNIK

WERMA Signaltechnik GmbH + Co. KG
D-78604 Rietheim-Weilheim
Telefon +49 (0)7424 / 9557-0
Telefax +49 (0)7424 / 9557-44
info@werma.com
www.werma.com

(D) Anschluss **ausschließlich** durch ausgebildete Elektro-Fachkräfte.
(GB) Electrical connection is to be made by trained electrical specialists **only**.
(F) Le branchement doit **uniquement** être effectué par des professionnels.
(I) Il collegamento deve essere eseguito **solo** da elettricisti specializzati.
(E) La conexión **sólo** debe ser realizada por electricistas debidamente formados.
(PT) A ligação deve ser feita **exclusivamente** por profissional elétrico especializado.
(NL) De aansluiting mag **enkel** gebeuren door erkende vakmensen.
(CZ) Připojení smí **provádět** pouze kvalifikovaný personál.
(PL) Podłączenie **wyłącznie** przez specjalistów-elektryków.
(FI) Liittäminen kuuluu **ainoastaan** koulutettujen sähköalan ammattilaisten tehtäviin.
(RUS) Подключение проводится только специалистом-электриком.
(TR) Bağlantı **sadece** eğitimli elektrik teknisyenleri tarafından yapılmalıdır.
(CN) 布线需由专业电工执行

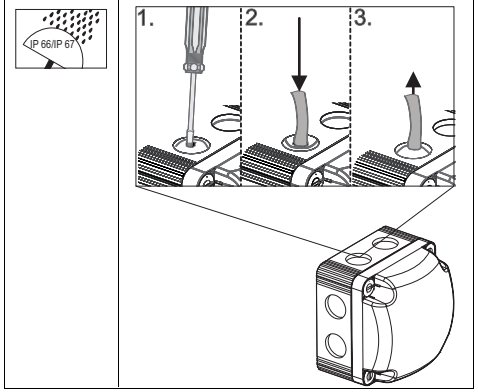

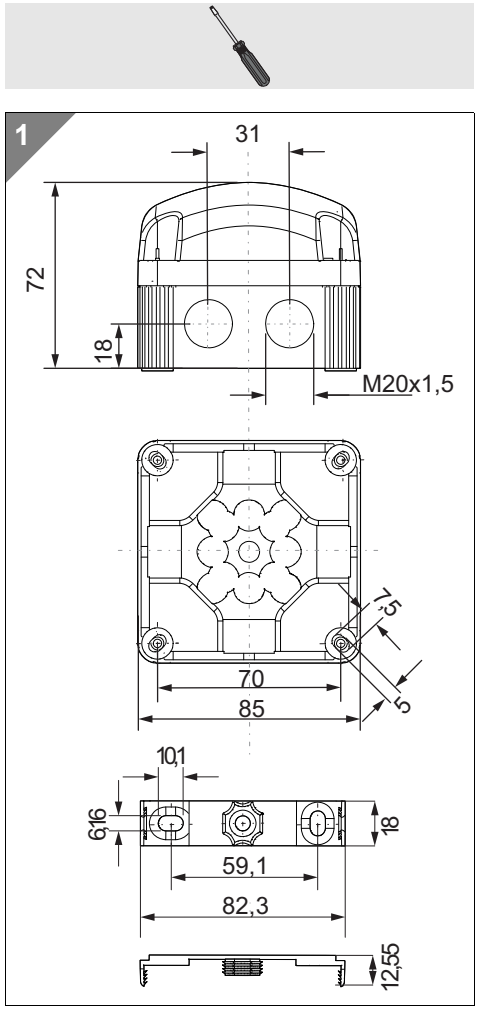

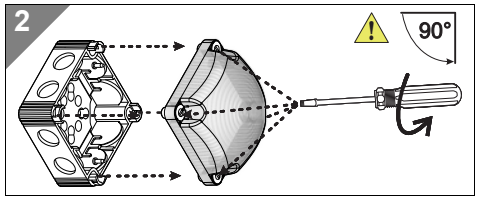

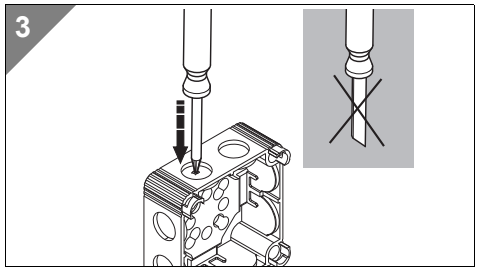

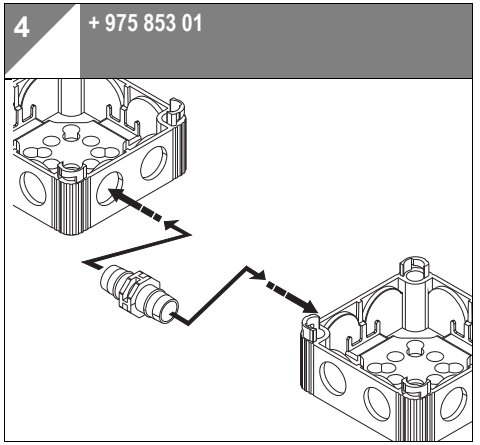

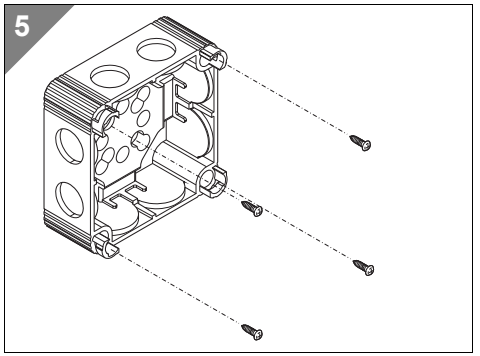

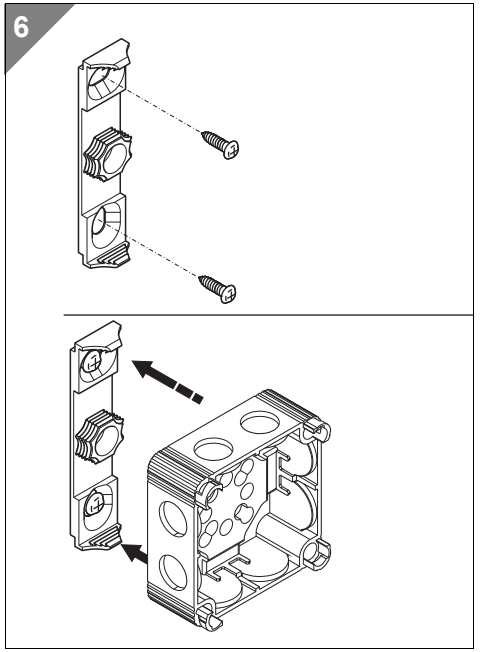

7a LED 853

⚠ DANGER

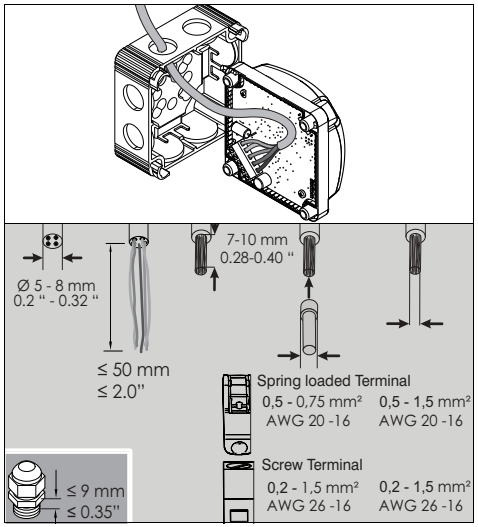

LED (853 x20 xx)

12V - 24 V
48 V
115 V - 230 V

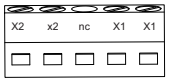

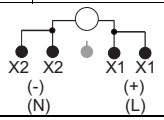

Leuchtbild, Light effect, Effet lumineux	
Dauerleuchte/Permanent/Feu fixe	
853 x00 54	12 VDC, ≤ 180 mA, I_0 < 1250 mA
853 x00 55	24 VDC, ≤ 80 mA, I_0 < 500 mA
853 x00 66	48 VAC, ≤ 35 mA, I_0 < 200 mA
853 x00 60	115-230VAC, ≤ 40 mA, I_0 < 7 A
Doppelblitz/Double Flash/Double Flash	
853 x10 54	12 VDC, ≤ 100 mA, I_0 < 1250 mA
853 x10 55	24 VDC, ≤ 80 mA, I_0 < 500 mA
853 x10 66	48 VAC, ≤ 90 mA, I_0 < 2 A
853 x10 60	115-230 VAC,≤180 mA, I_0 < 7 A
EVS	
853 x20 54	12 VDC, ≤ 400 mA, I_0 < 1250 mA
853 x20 55	24 VDC, ≤ 200 mA, I_0 < 500 mA
853 x20 66	48 VAC, ≤ 95 mA, I_0 < 2 A
853 x20 60	115-230 VAC, ≤ 180 mA, I_0 < 7A

LED-Multicolour (853 480 55)

24V

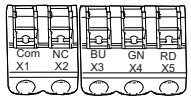

Colour		Technical Data
RD	Com X2 X3 X4 X5 (-, +24V)	80mA/ ~1,9 W
GN	Com X2 X3 X4 X5 (-, +24V)	70 mA/ ~1,7W
YE	Com X2 X3 X4 X5 (-, +24V +24V)	115mA/ ~ 2,7 W
WH	Com X2 X3 X4 X5 (-, +24V +24V +24V)	130mA/ ~ 3,4W
BU	Com X2 X3 X4 X5 (-, +24V)	70mA/ ~ 1,7 W
MOL	Com X2 X3 X4 X5 (-, +24V +24V)	125mA/ ~ 3W
CYAN	Com X2 X3 X4 X5 (-, +24V +24V)	120mA/ ~ 2,9W

LED-RGY (853 480 60)

230V

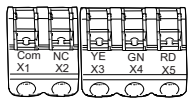

Colour		115 V		230 V
		50 Hz	60 Hz	50 Hz
RD	Com X2 X3 X4 X5 (N) (L)	14mA/ 0,55W	17mA/ 0,55W	22mA/ 1,15W
YE	Com X2 X3 X4 X5 (N) (L)	20mA/ 0,94W	24mA/ 0,94	35mA/ 2W
GN	Com X2 X3 X4 X5 (N) (L)	14mA/ 0,65W	17mA/ 0,65W	23mA/ 1,4W

7b Sounder 153

⚠ WARNING



Sounder 153 000 54
153 000 55

12V
24V

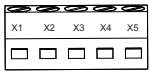

153 000 54	12VDC, ≤ 70 mA, I_0 < 500 mA
153 000 55	24VDC, ≤ 120 mA, I_0 < 500 mA

Tone	Tone Type		Frequencies
1	Dauerton Continuous continu	Com X2 X3 X4 X5 (-, +24V)	~ 3000 Hz
5	ansteigend rising montant	Com X2 X3 X4 X5 (-, +24V +24V)	~ 800- 970Hz @ 1Hz
6	ansteigend rising montant	Com X2 X3 X4 X5 (-, +24V +24V)	~2400-2850 Hz @ 7 Hz
7	abfallend falling incline	Com X2 X3 X4 X5 (-, +24V +24V +24V)	1200-500 Hz @ 1 Hz
Tone -10 dB	Volume max. = off Volume - 10 dB = on	Com X2 X3 X4 X5 (-, +24V +24V +24V)	

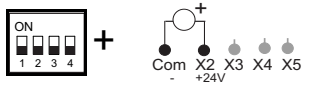

Tone	Code	Tone Type	Frequencies
1	**000x**	Dauerton Continuous continu	~ 3000 Hz
2	**001x**	Hupenton horn tone trompe	~ 110 Hz
3	**010x**	1Hz Ton 1Hz tone 1Hz ton	~ 3000 Hz
4	**011x**	20 Hz Trillerton 20 Hz whistle tone 20 Hz trille	~ 3000 Hz
5	**100x**	ansteigend rising montant	~ 800- 970Hz @ 2Hz
6	**101x**	ansteigend rising montant	~2400-2850 Hz @ 7 Hz
7	**110x**	abfallend falling incline	1200-500 Hz @ 0,7 Hz
8	**111x**	alternierend alternatig alternant	800/1200 Hz @ 1 Hz
Tone -10 dB	**xxx1**	Volume max. = off Volume - 10 dB = on	

Sounder 153 000 60
153 000 66

48V
115...230V

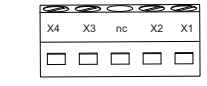

153 000 60	115-230VAC, ≤ 150mA, I_0 < 7A
153 000 66	48VAC, ≤ 150 mA, I_0 < 2A

Tone	Tone Type		Frequencies
1	Dauerton Continuous continu	X4 X3 nc X2 X1 (N) (L)	~ 3000 Hz
Tone -10 dB	Volume max. = off Volume - 10 dB = on	X4 X3 nc X2 X1 (N) (L) (L)	

NOTICE

8

853 x10 60, 853 x10 66
853 x20 60, 853 x20 66
153 000 60, 153 000 66

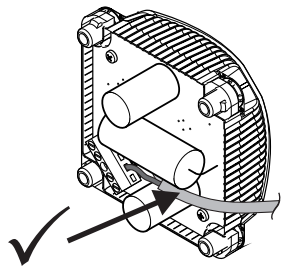

9

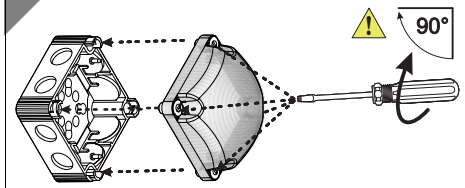

310.853.001.0516AK

© D

WERMA SIGNALTECHNIK