11B160024220

THREE-POLE CONTACTOR, IEC OPERATING CURRENT ITH (AC1) = 1600A, AC COIL, 220...240VAC



Product designation			Power contactor
Product type designation			B1600
Contact characteristics			
Number of poles		Nr.	3
Rated insulation voltage Ui IEC/EN		V	690
Rated impulse withstand voltage Uimp		kV	8
Operational frequency			
	min	Hz	25
	max	Hz	400
IEC Conventional free air thermal current Ith		A	1600
Operational current Ie			
	AC-1 (≤40°C)	A	1600
	AC-1 (≤55°C)	A	1360
	AC-1 (≤70°C)	A	1120
Rated operational power AC-1 (T≤40°C)			
	230V	kW	550
	400V	kW	950
	500V	kW	1200
	690V	kW	1650
Short-time allowable current for 10s (IEC/EN60947-1)		A	8300
Protection fuse			
	gG (IEC)	A	1600
Making capacity (RMS value)		A	6300
Breaking capacity at voltage			
	440V	A	6300
	500V	A	5600
	690V	A	5000
Resistance per pole (average value)		mΩ	7
Power dissipation per pole (average value)			
	Ith	W	180
Tightening torque for terminals			
	min	Nm	35
	max	Nm	35
	min	lbin	25.8
	max	lbin	25.8
Max number of wires simultaneously connectable		Nr.	2
Power terminal protection according to IEC/EN 60529			IP00
Mechanical features			
Operating position			
	normal		Vertical plan
	allowable		±30°
Fixing			Screw
Weight		g	4915
Auxiliary contact characteristics			
Thermal current Ith		A	16

The characteristics described in this document are subject to updates or modifications at any time. The descriptions, technical and functional information, illustrations and instructions in this brochure are purely illustrative, and are consequently not contractually binding

IEC/EN 60947-5-1 designation				A600 - P600
Operating current AC15				
		230V	A	3
		400V	A	1.9
		500V	A	1.4
Operating current DC12				
		110V	A	5.7
Operating current DC13				
		24V	A	5.7
		48V	A	2.9
		60V	A	2.3
		125V	A	0.6
		220V	A	0.2
		600V	A	1.2
Operations				
Mechanical life			cycles	5000000
Electrical life			cycles	700000
Safety related data				
Performance level B10d according to EN/ISO 13489-1				
		rated load	cycles	700000
		mechanical load	cycles	5000000
Mirror contats according to IEC/EN 609474-4-1				yes
EMC compatibility				yes
AC coil operating				
Rated AC voltage at 50/60Hz, 60Hz				
		min	V	220
		max	V	240
AC operating voltage				
	of 50/60Hz coil powered at 50Hz			
	pick-up			
		min	%Us	80
		max	%Us	110
	drop-out			
		min	%Us	20
		max	%Us	60
	of 50/60Hz coil powered at 60Hz			
	pick-up			
		min	%Us	80
		max	%Us	110
	drop-out			
		min	%Us	20
		max	%Us	60
	of 60Hz coil powered at 60Hz			
	pick-up			
		min	%Us	80
		max	%Us	110
	drop-out			
		min	%Us	20
		max	%Us	60
AC average coil consumption at 20°C				
	of 50/60Hz coil powered at 50Hz			
		in-rush	VA	800
		holding	VA	45
	of 50/60Hz coil powered at 60Hz			

The characteristics described in this document are subject to updates or modifications at any time. The descriptions, technical and functional information, illustrations and instructions in this brochure are purely illustrative, and are consequently not contractually binding

			in-rush	VA	800
			holding	VA	45
Dissipation at holding ≤20°C 50Hz				W	40
DC coil operating					
DC rated control voltage					
			min	V	220
			max	V	240
DC operating voltage					
	pick-up				
			min	%Us	80
Max cycles frequency					
Mechanical operation				cycles/h	1200
Operating times					
Average time for Us control					
	in AC				
		Closing NO			
			min	ms	300
			max	ms	450
		Opening NO			
			min	ms	70
			max	ms	130
	in DC				
		Closing NO			
			min	ms	300
			max	ms	450
		Opening NO			
			min	ms	70
			max	ms	130
UL technical data					
Contact rating of auxiliary contacts according to UL					A600 - P600
Ambient conditions					
Temperature					
	Operating temperature				
			min	°C	-50
			max	°C	60
	Storage temperature				
			min	°C	-60
			max	°C	80
Max altitude				m	3000
Resistance & Protection					
Pollution degree					3
Dimensions					

The characteristics described in this document are subject to updates or modifications at any time. The descriptions, technical and functional information, illustrations and instructions in this brochure are purely illustrative, and are consequently not contractually binding

11B160024220

THREE-POLE CONTACTOR, IEC OPERATING CURRENT ITH (AC1) = 1600A, AC COIL, 220...240VAC

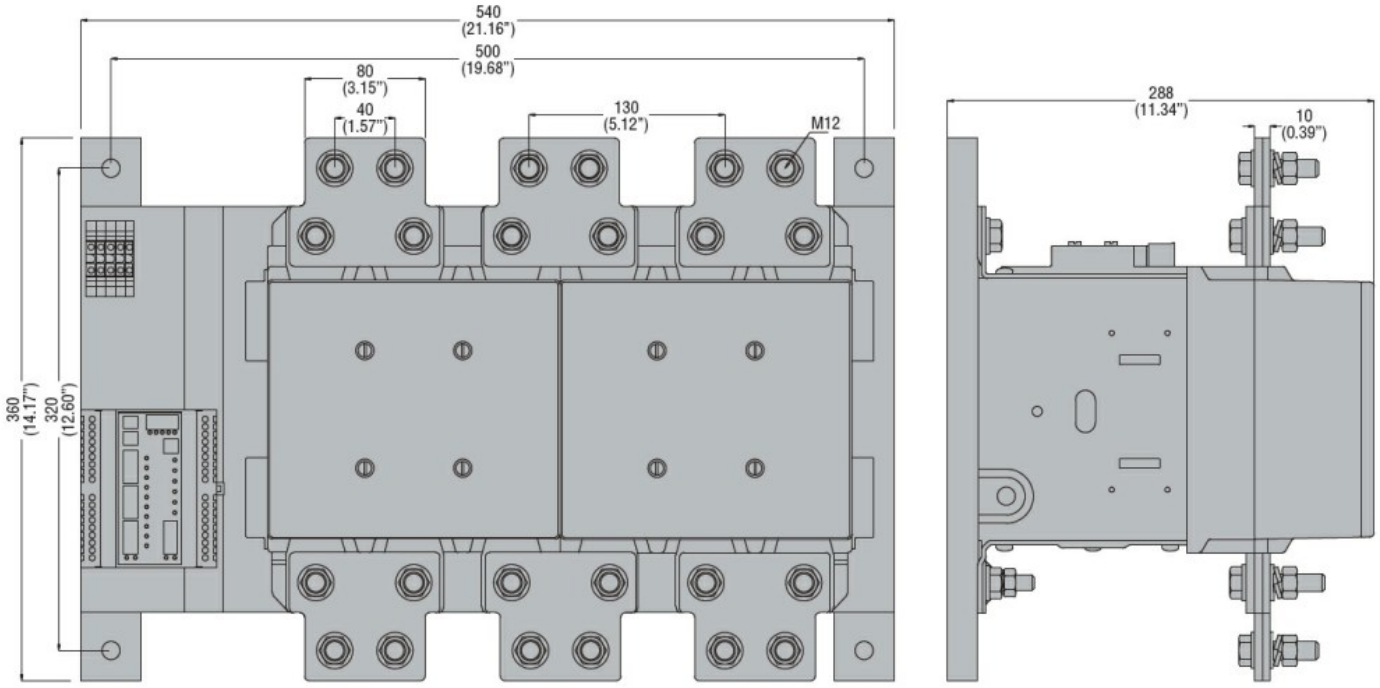

Wiring diagrams

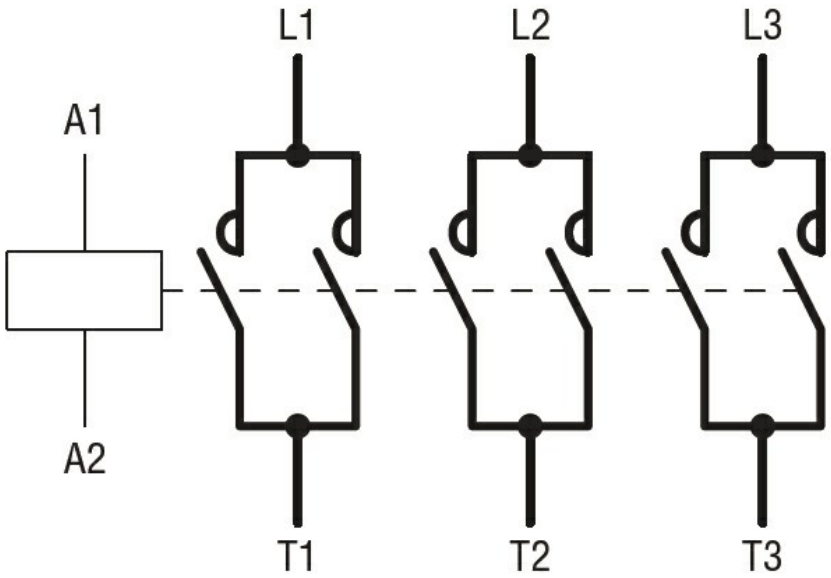

Certifications and compliance

Compliance

CSA C22.2 n° 60947-1
CSA C22.2 n° 60947-4-1
IEC/EN 60947-1
IEC/EN 60947-4-1
UL 60947-1
UL 60947-4-1

Certificates

/

ETIM classification

ETIM 8.0	EC000066 - Power contactor, AC switching

The characteristics described in this document are subject to updates or modifications at any time. The descriptions, technical and functional information, illustrations and instructions in this brochure are purely illustrative, and are consequently not contractually binding