# E30420

## Protective cover for process sensors

PROTECTIVE COVER

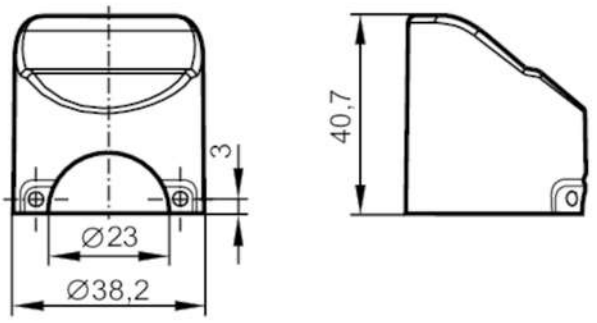


| | | |
|---|---|---|
| **Application** | | |
| Design | | for fluid sensors with connector M12 |
| **Mechanical data** | | |
| Weight | [g] | 6.8 |
| Materials | | PP |
| **Remarks** | | |
| Pack quantity | | 1 pcs. |