TP2007

Temperature plug for hygienic applications

TP-CDC-AFZVG/US/

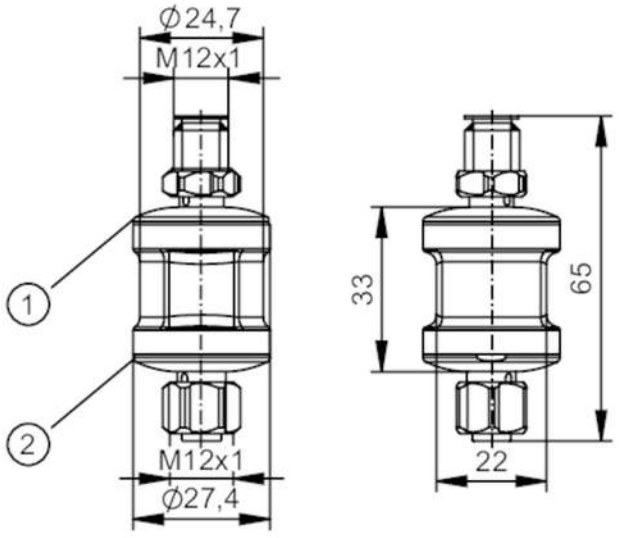

1 LED switching status indication
2 LED voltage indication

Product characteristics			
Number of inputs and outputs		Number of digital outputs: 1; Number of analogue outputs: 1	
Measuring range		-100...300 °C	-148...572 °F
Communication interface		IO-Link	
Application			
Special feature		Gold-plated contacts	
Application		for Pt100 and Pt1000 measuring elements	
Electrical data			
Operating voltage	[V]	18...32 DC	
Protection class		III	
Reverse polarity protection		yes	
Power-on delay time	[s]	2	
Integrated watchdog		yes	
Inputs / outputs			
Number of inputs and outputs		Number of digital outputs: 1; Number of analogue outputs: 1	
Outputs			
Total number of outputs		2	
Output signal		analogue signal; IO-Link; switching signal; (configurable)	
Electrical design		PNP/NPN	
Number of digital outputs		1	
Output function		normally open / normally closed; (parameterisable)	
Max. voltage drop switching output DC	[V]	2	
Permanent current rating of switching output DC	[mA]	100	
Number of analogue outputs		1	
Analogue current output	[mA]	4...20	
Max. load	[Ω]	(Ub-13,5)/0,0215	

TP2007

Temperature plug for hygienic applications

TP-CDC-AFZVG/US/

Short-circuit protection		yes	
Type of short-circuit protection		not locked in place	
Overload protection		yes	
Measuring/setting range			
Measuring range		-100...300 °C	-148...572 °F
Factory setting		0...100 °C	
Resolution of analogue output	[K]	0.017; (MS: -10...150 °C)	
Accuracy / deviations			
Precision analogue output	[K]	± 0,1; (MS: -10...150 °C) ; or ± (0,067 % MS)	
Precision IO-Link	[K]	± 0,05	
Temperature coefficient analogue output	[% of the span / 10 K]	< 0,1	
Temperature coefficient IO-Link	[% of the span / 10 K]	< 0,06	
Response times			
Max. measuring/display cycle	[ms]	350	
Software / programming			
Parameter setting options		scaling of the analogue output; calibration adjustment; hysteresis / window; switching logic; simulation mode	
Interfaces			
Communication interface		IO-Link	
Transmission type		COM2 (38,4 kBaud)	
IO-Link revision		1.1.3	
IO-Link resolution temperature	[K]	0.01	
Operating conditions			
Ambient temperature	[°C]	-25...80	
Storage temperature	[°C]	-40...85	
Protection		IP 68; IP 69K	
Tests / approvals			
EMC		DIN EN 61000-6-2	if frequencies above 40 MHz occur, the housing must be grounded
		DIN EN 61000-6-3	
Shock resistance		DIN EN 68000-2-27	50 g (11 ms)
Vibration resistance		DIN EN 60068-2-6	20 g (10...2000 Hz)
Mechanical data			
Weight	[g]	53.9	
Housing		cylindrical	
Dimensions	[mm]	Ø 27.4 / L = 65	
Materials		LED: PA; housing: stainless steel (316L/1.4404)	
Sealing material		FKM	

TP2007

Temperature plug for hygienic applications

TP-CDC-AFZVG/US/

Displays / operating elements		
Display	status	1 x LED, green
	switching status	1 x LED, orange

Remarks	
Remarks	MS = set measuring span
Pack quantity	1 pcs.

Electrical connection

Connector: 1 x M12; coding: A; Moulded body: TPU; Locking: stainless steel (316L/1.4404); Sealing: FKM; Contacts: gold-plated



Connection

