European Community Design Registration RCD 001149447

2012-12-05

Wall Stand

W1

Performance
Design

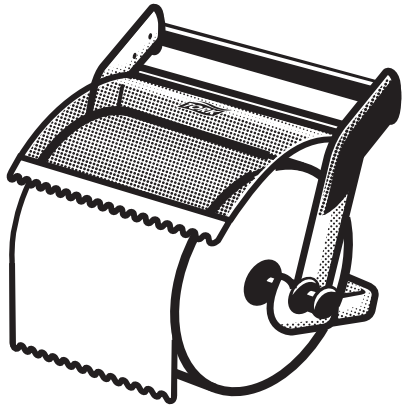

essity

Manufactured by Essity Hygiene and Health AB
SE-40503 Göteborg, Sweden
Visiting address: Mölndals Bro 2, Mölndal
www.essity.com, www.torkglobal.com
Made in China
Patents/Brevets/Patentes: www.essity.com/patents

www.torkglobal.com

TORK®

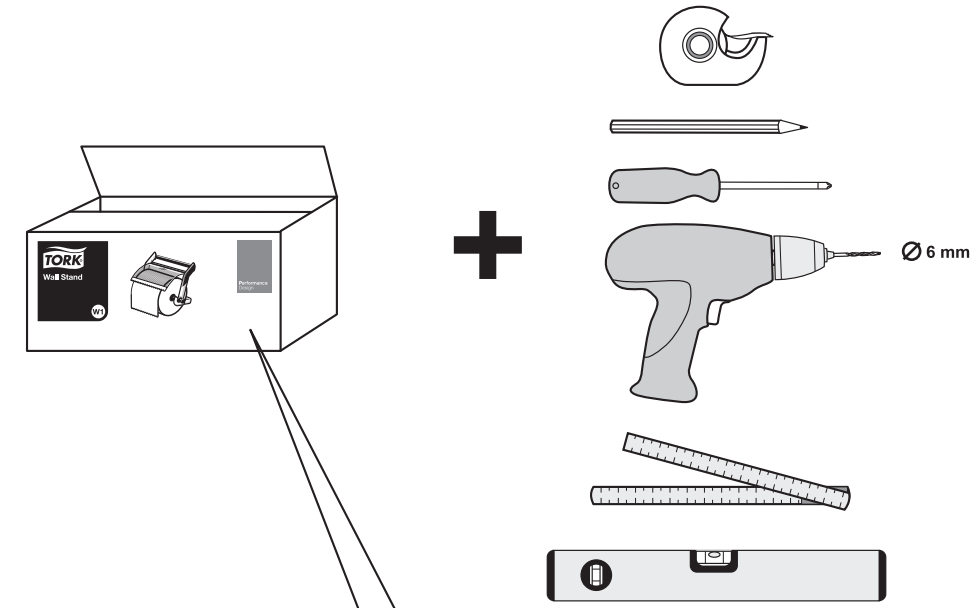
TORK
Wall Stand
W1
Performance Design
Ø 6 mm

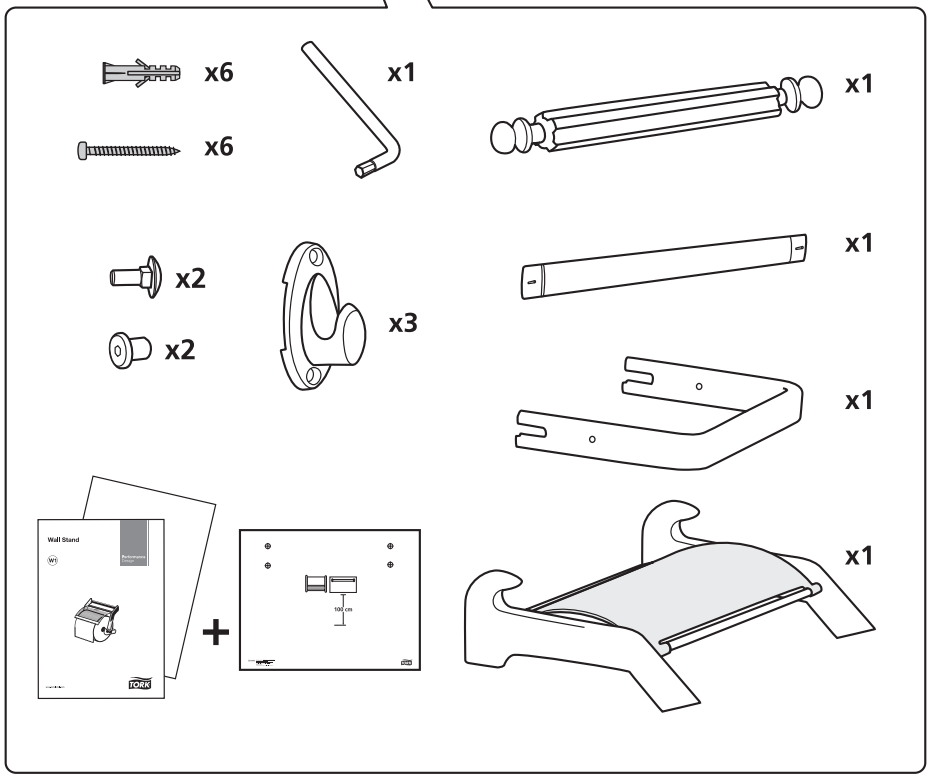
x6
x6
x1
x1
x2
x2
x3
x1
x1
Wall Stand
W1
TORK
100 cm
x1

3.

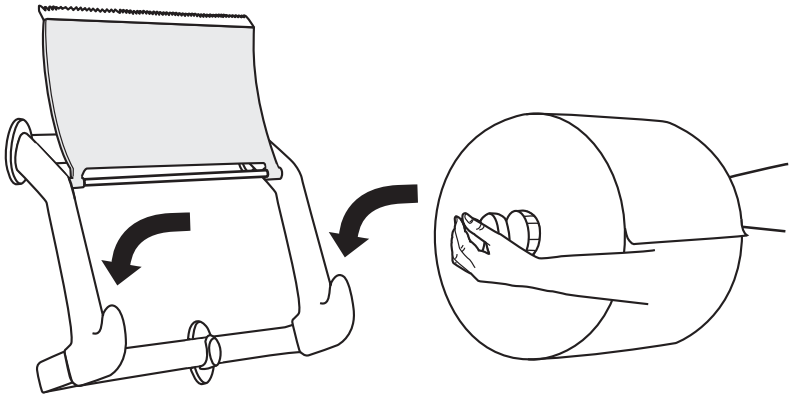

4.

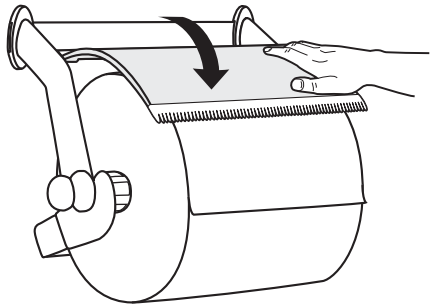

5.

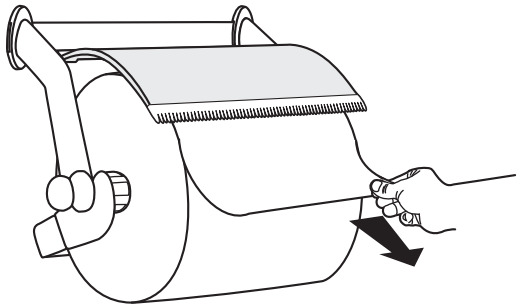

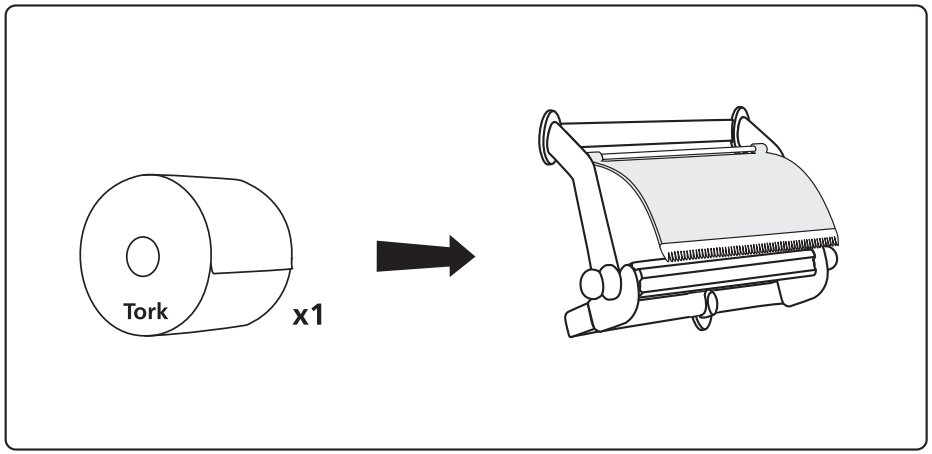

1.

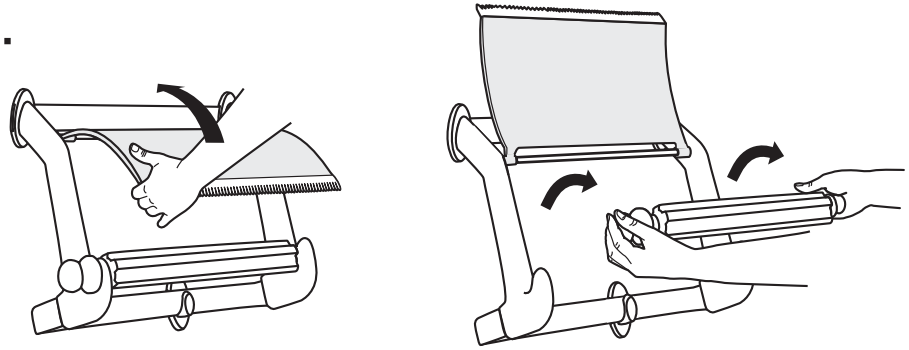

2.

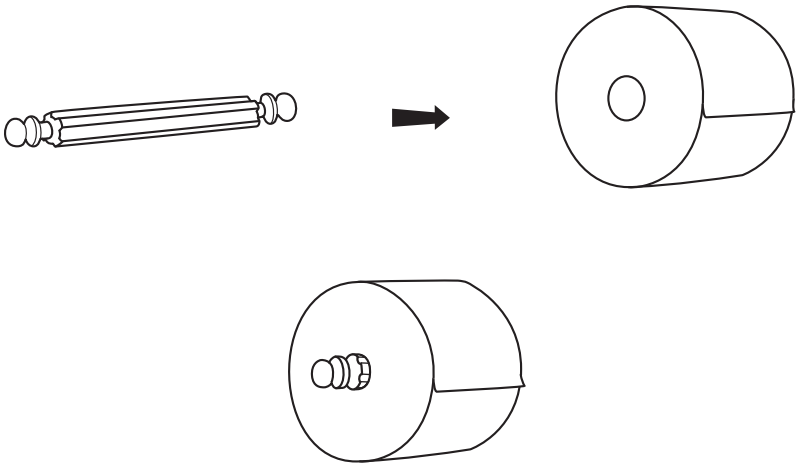

1.

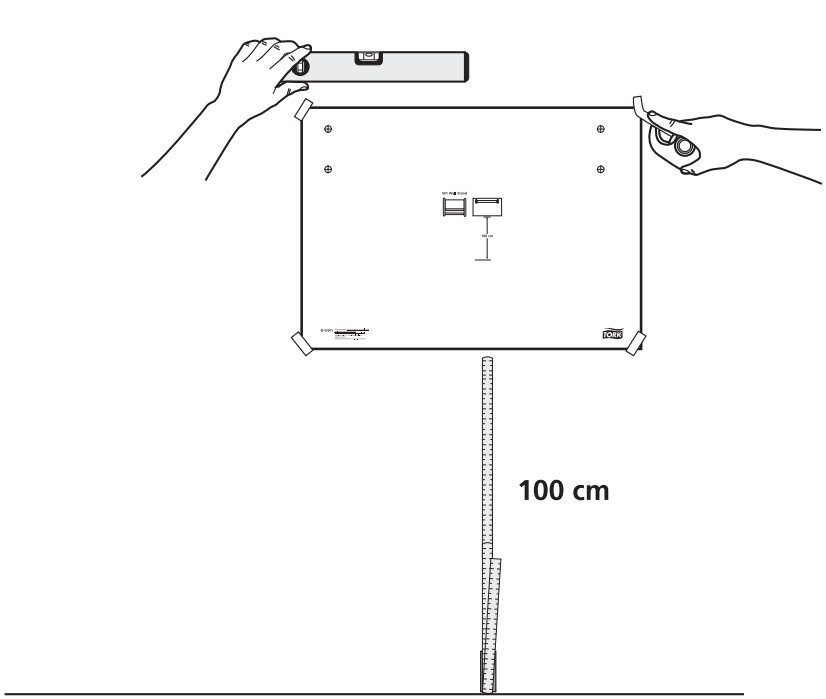

2.

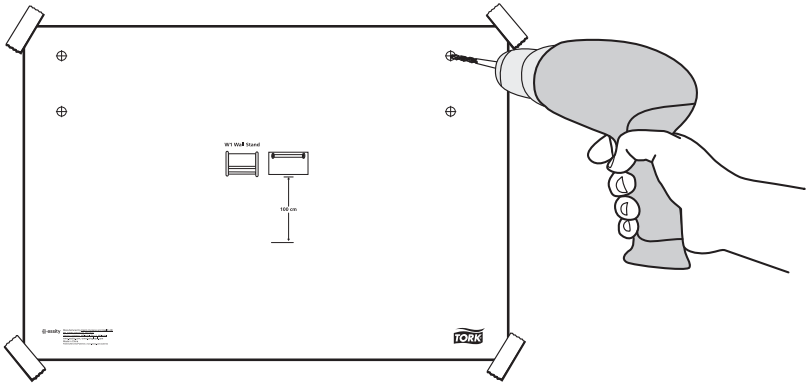

1.

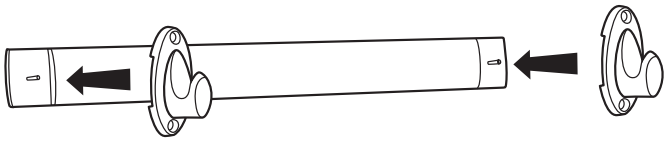

2.

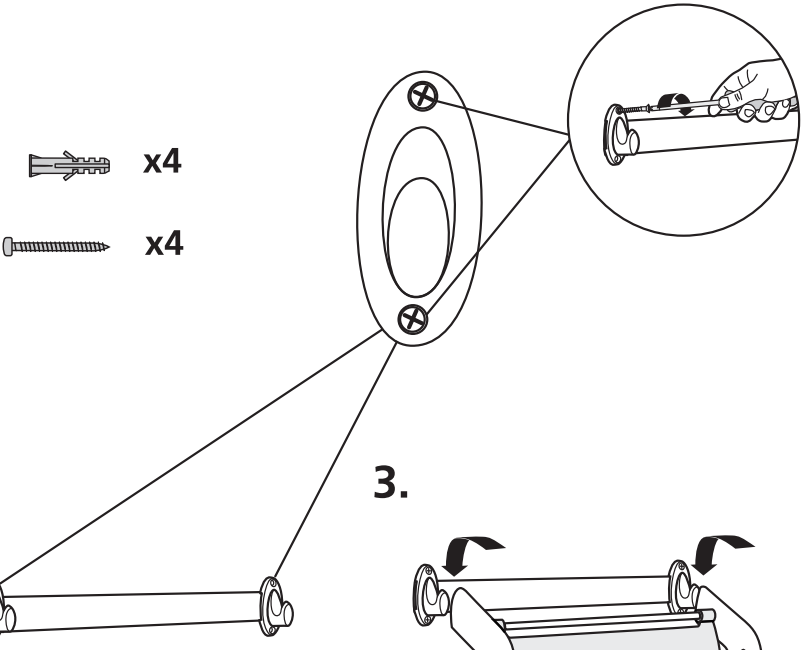

3.

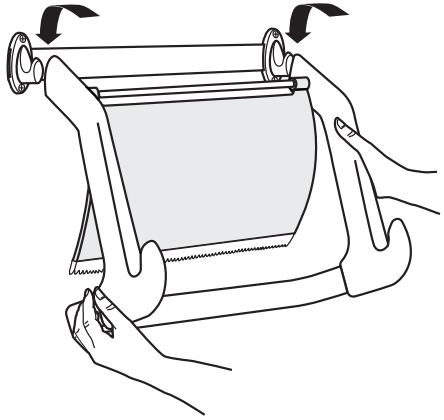

4.

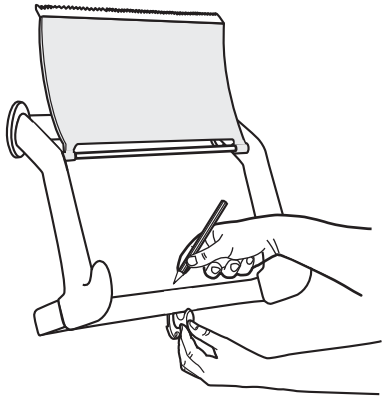

5.

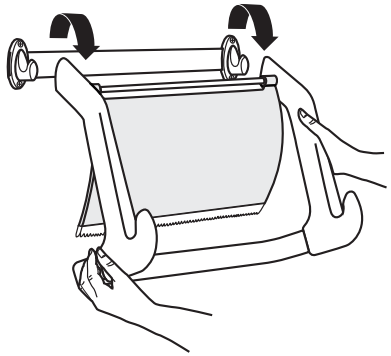

6.

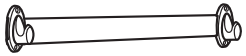

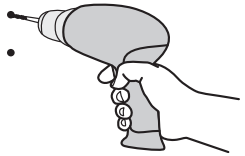

7.

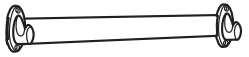



8.

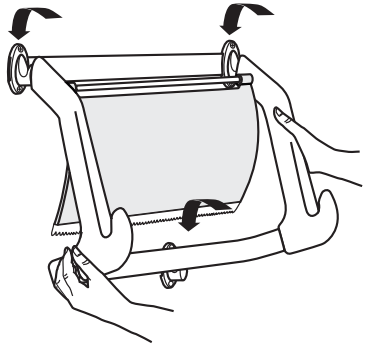

9.

