E11435

Jumper cable with valve plug

VVSAB031MSS0005H03STGH030MSS

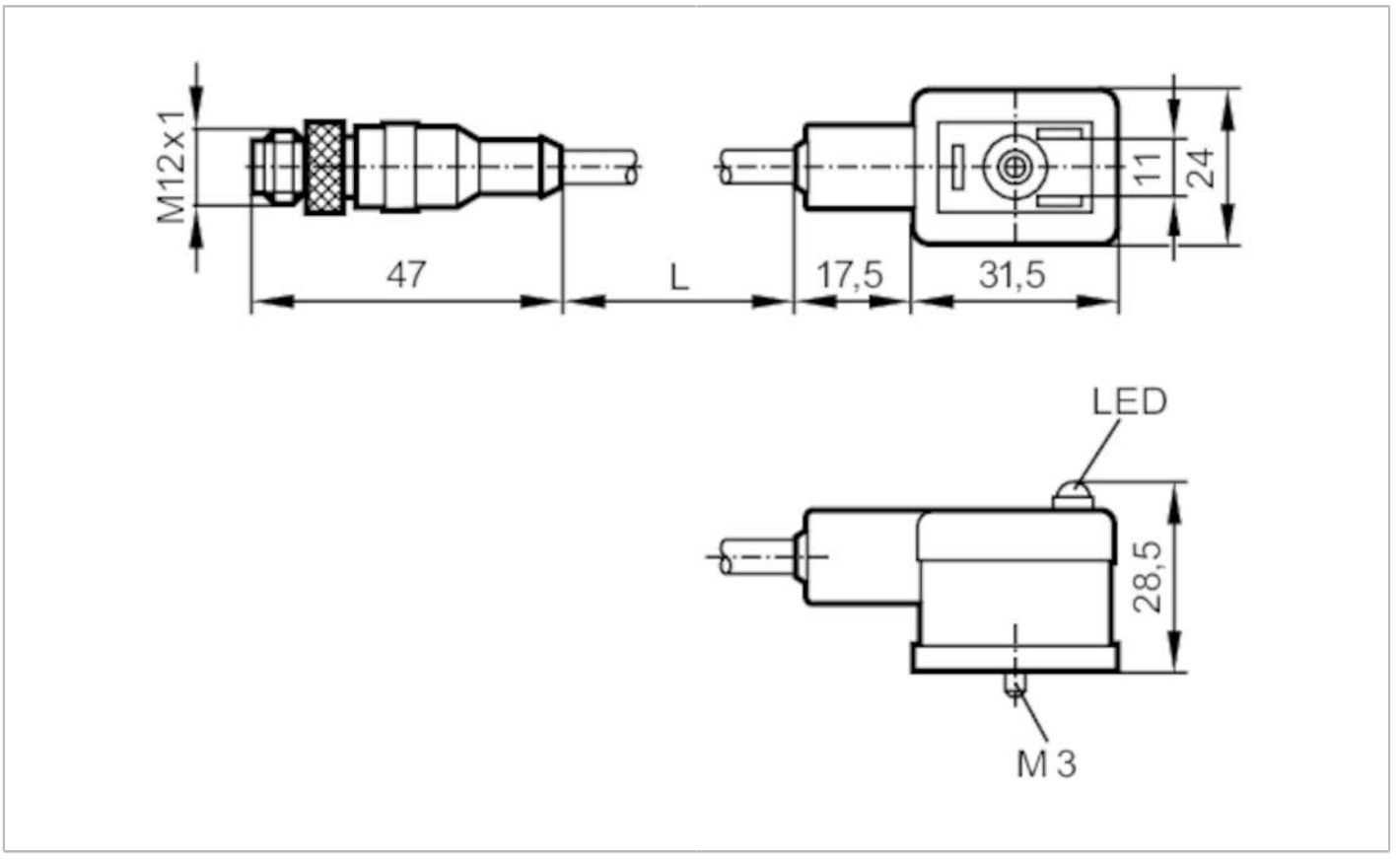

Application		
Special feature		Free from silicone; Halogen-free; Gold-plated contacts
Free from silicone		yes
Electrical data		
Operating voltage	[V]	< 24 AC/DC
Overvoltage protection		yes; (VDR)
Max. current load total	[A]	3
Operating conditions		
Ambient temperature	[°C]	-25...80
Protection		IP 67
Mechanical data		
Weight	[g]	267.3
Materials		PUR
Moulded-body material		PUR
Material nut		brass, nickel-plated
Displays / operating elements		
Display	switching status	1 x LED, yellow
Accessories		
Items supplied		screw
		panel for labelling

E11435

Jumper cable with valve plug

VVSAB031MSS0005H03STGH030MSS

Remarks

Pack quantity	1 pcs.

Electrical connection - plug

Connector: 1 x M12, straight; coding: A; Moulded body: PUR; Locking: brass, nickel-plated; Contacts: gold-plated; Tightening torque: 0.7...0.9 Nm

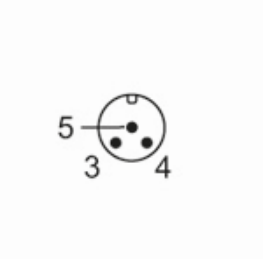

Electrical connection

Cable: 5 m, PUR, Halogen-free, black, Ø 5 mm; 3 x 0.5 mm² (42 x Ø 0.1 mm)

Connection

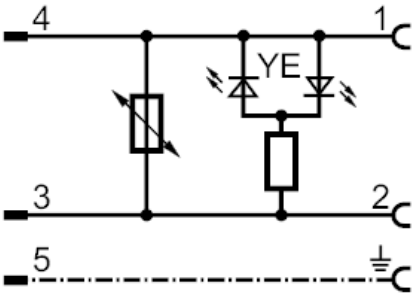

Electrical connection - socket

Connector: 1 x valve type B industrial standard, angled; Moulded body: PUR; Locking: brass, nickel-plated; Contacts: nickel-plated brass; Tightening torque: 0.7...0.9 Nm

