KBD
Keyboard Switches



Features

- *Long operating life*
- *High reliability*
- *Excellent ergonomics*
- *RoHS compliant*

Typical Applications

- *Gaming keyboard*
- *Professional keyboard*
- *Industrial keyboard*
- *Workstation keyboard*

Specifications

CONTACT ARRANGEMENT: SPST
CONTACT RATING: 10mA @ 12 VDC
INITIAL CONTACT RESISTANCE: 200 m Ω max. (25m Ω typically)
INSULATION RESISTANCE: 100M Ω min. @ 100 VDC
DIELECTRIC STRENGTH: 250 VAC (50-60 Hz) 60 sec.
ELECTRICAL LIFE: 50,000,000 cycles
PRE-TRAVEL: 1.5 ~ 2 mm
OVERTRAVEL: 4 mm
OPERATING TEMPERATURE: -10˚C to +70˚C

Materials

COVER: Nylon (UL94V-0)
HOUSING: Nylon (UL94V-0)
KNOB: POM (UL94HB)
TERMINALS: Copper alloy, gold plated in contact area,
Tin plated in soldering area
SPRING: Stainless steel

How To Order

Our easy build-a-switch concept allows you to mix and match options to create the switch you need. To order, select desired option from each category and place it in the appropriate box.

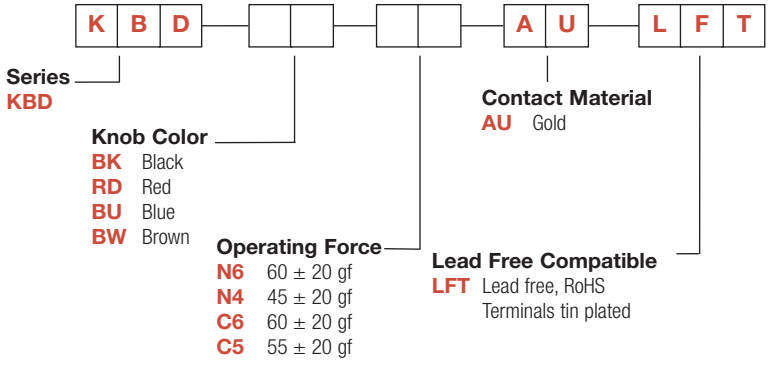

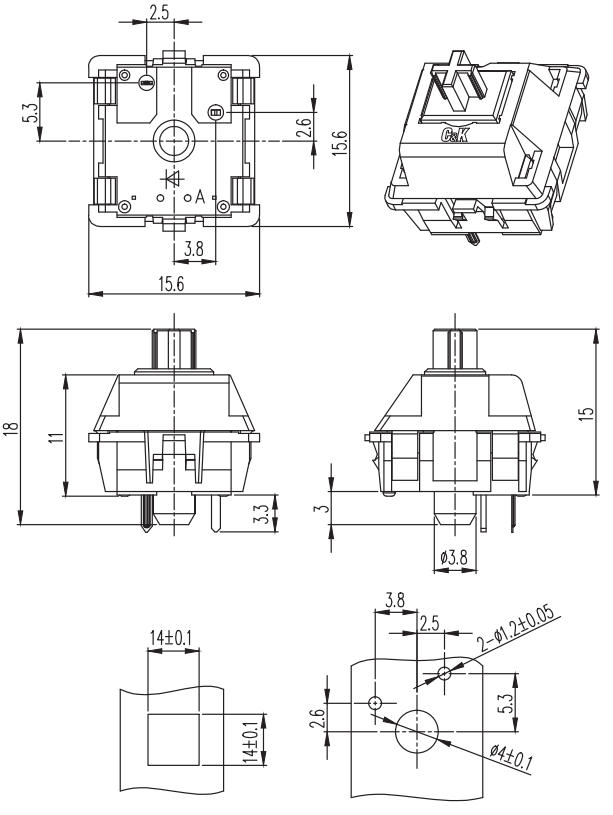

Panel Cut
Panel Thickness 1.2mm

PCB Diagram

PART NUMBER	FEELING	KNOB COLOR	OPERATING FORCE	OPERATING LIFE
KBDBKN6AULFT	Linear actuation	BLACK	60±20gf	50,000,000
KBDRDN4AULFT	Linear actuation	RED	45±20gf	50,000,000
KBDBUC6AULFT	Click pressure point	BLUE	60±20gf	50,000,000
KBDBWC5AULFT	Click pressure point	BROWN	55±20gf	50,000,000