IM513A

Inductive sensor

IMC4030-CPKG/US/3D/3G

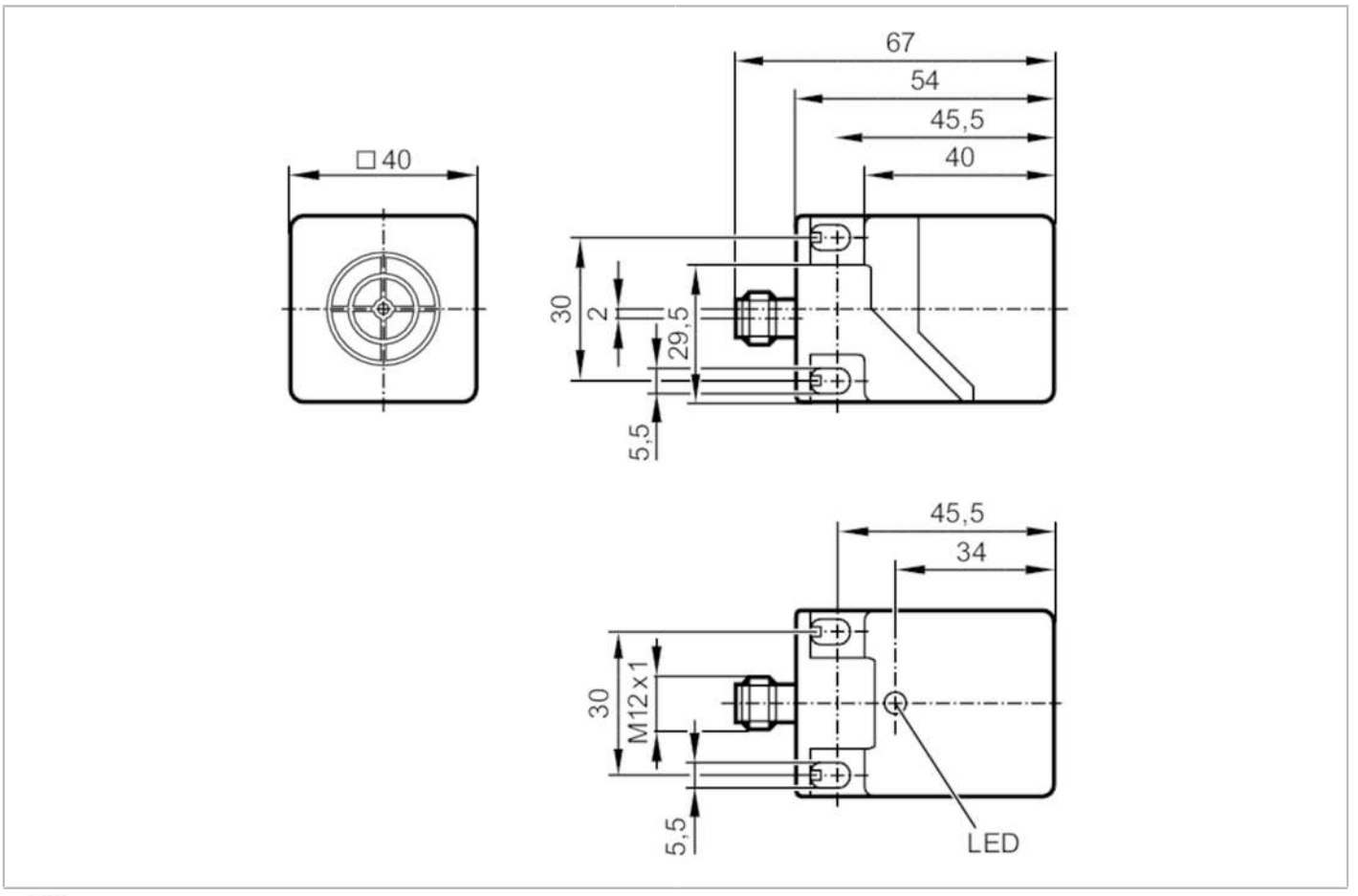

Product characteristics		
Electrical design		PNP
Output function		complementary
Sensing range	[mm]	30
Housing		rectangular
Dimensions	[mm]	40 x 40 x 54
Application		
Special feature		Gold-plated contacts
Electrical data		
Operating voltage	[V]	10...30 DC
Current consumption	[mA]	< 15
Protection class		III
Reverse polarity protection		yes
Outputs		
Electrical design		PNP
Output function		complementary
Max. voltage drop switching output DC	[V]	2.5
Max. leakage current	[mA]	0.1

IM513A

Inductive sensor

IMC4030-CPKG/US/3D/3G

Permanent current rating of switching output DC [mA]		200
Switching frequency DC [Hz]		100
Short-circuit protection		yes
Type of short-circuit protection		pulsed
Overload protection		yes
Detection zone		
Sensing range [mm]		30
Real sensing range Sr [mm]		30 ± 10 %
Operating distance [mm]		0...24.3
Accuracy / deviations		
Correction factor		steel: 1 / stainless steel: 0.7 / brass: 0.4 / aluminium: 0.3 / copper: 0.2
Hysteresis [% of Sr]		1...20
Switch point drift [% of Sr]		-10...10
Operating conditions		
Ambient temperature [°C]		-20...60
Protection		IP 65; IP 67
Tests / approvals		
ATEX marking		II 3D Ex tc IIIC T95°C Dc X; II 3G Ex ec IIC T4 Gc X
EMC	EN 60947-5-2	
MTTF [years]		1260
Mechanical data		
Weight [g]		173
Housing		rectangular
Mounting		non-flush mountable
Dimensions [mm]		40 x 40 x 54
Materials		PC; PA; TPE
Displays / operating elements		
Display	switching status	1 x LED, yellow
Remarks		
Remarks		Recommendation: Check the safe functioning of the unit after a short circuit.
		5 positions of the active zone possible
Pack quantity		1 pcs.

Electrical connection - plug

Connector: 1 x M12; coding: A; Contacts: gold-plated

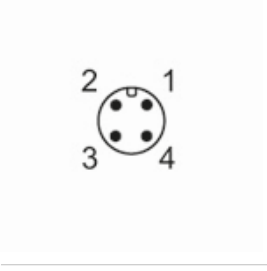

IM513A

Inductive sensor

IMC4030-CPKG/US/3D/3G

Connection

