Squashni / Micro Electronic Sounders

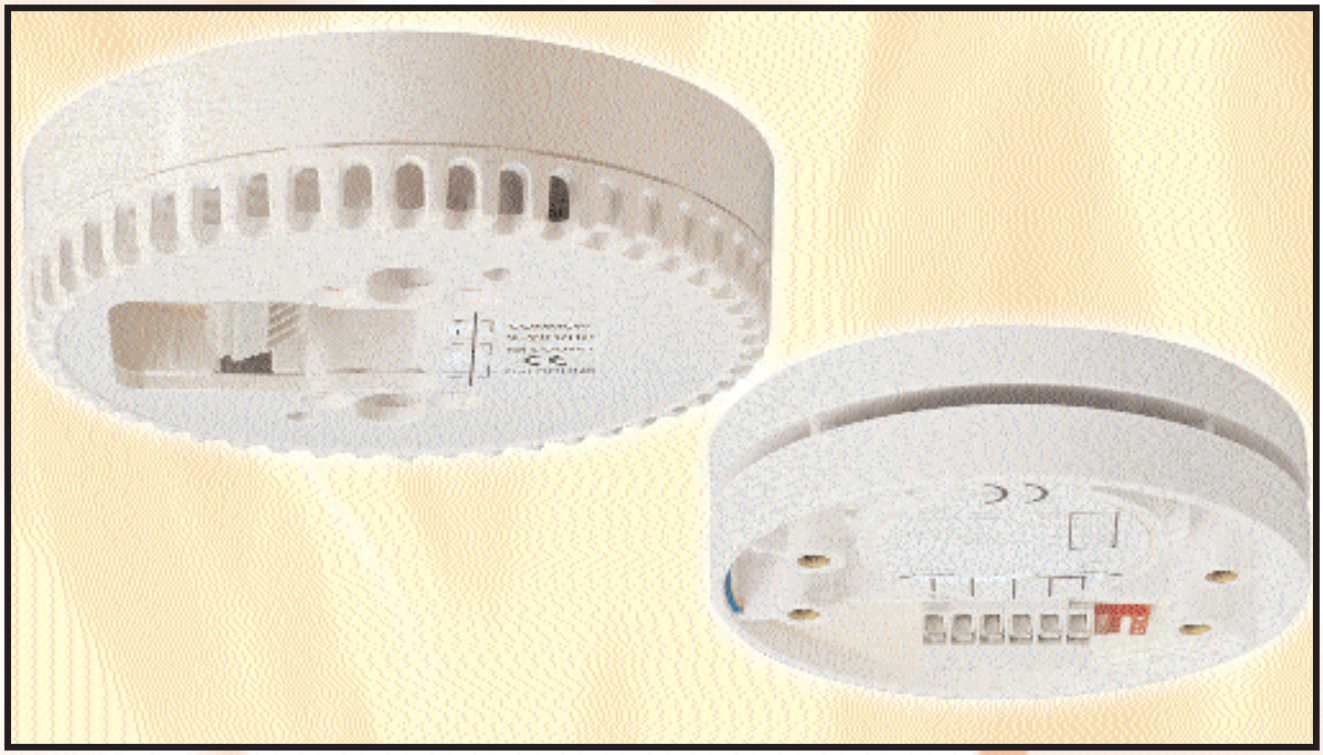

Squashni

The Squashni Electronic Sounder is the original innovative ceiling sounder with a universal fire detector mounting platform. The ultra slim profile provides an unobtrusive sounder installation when combined with a smoke or heat detector. A blank cover can also be supplied to enable the Squashni to be used as a normal, stand alone wall or ceiling mounted sounder.
Whilst most detectors will fit the standard Squashni, a larger diameter unit is also available if required. This versatile sounder has a wide range of applications and is ideal for use in multi occupancy dwellings.

- **ULTRA SLIM PROFILE FOR UNOBTRUSIVE INSTALLATION**
- **FIXING PLATFORM FOR DETECTOR BASES AND OTHER DEVICES**
- **REDUCED INSTALLATION COSTS**
- **BLANK COVER FOR USE AS STAND ALONE SOUNDER**
- **COLOUR MATCHED TO LEADING MANUFACTURERS' DETECTORS**
- **CHOICE OF 28 DIFFERENT PRE-SET TONES**
- **VOLUME CONTROL**
- **VERSIONS APPROVED TO CNPP & VdS REQUIREMENTS**

Squashni Micro

The Squashni Micro is an ultra low current ceiling sounder with an integral detector mounting platform. A blanking cover is also available so that the unit can be used as a slim and unobtrusive stand alone sounder.
In low power mode the Squashni Micro has a current consumption of only 3mA, making it ideal for use with loop powered systems or any other application where power may be limited. A higher output mode is switch selectable, providing outputs of up to 97dBA for use as a general purpose alarm sounder.
In addition to the selectable sound output levels, the Squashni Micro can produce four types of alarm tone. The tones are identical whether the sounder is in low current or high output mode permitting installations to be carried out using just one type of sounder.

- **ULTRA LOW 3mA CURRENT CONSUMPTION**
- **IDEAL FOR LOOP POWERED SYSTEMS**
- **SWITCH SELECTABLE SOUND OUTPUT LEVELS**
- **FIXING PLATFORM FOR DETECTOR BASES**
- **COLOUR MATCHED TO LEADING MANUFACTURERS' DETECTORS**
- **BLANK COVER FOR USE AS STAND ALONE SOUNDER**
- **REDUCED INSTALLATION COSTS**

Squashni Electronic Sounders

Application Flexibility

The Squashni concept was designed for use in a wide variety of fire alarm and other safety system applications. Whilst primarily intended to accept the direct mounting of heat or smoke detectors, the Squashni is also suitable for use with many other types of device, such as xenon beacons or ceiling mounted alarm pulls, where a combined audible warning is required.
Colour matched covers are also available to enable the Squashni and Squashni Micro to be used as an unobtrusive stand alone sounder.

Product Flexibility

The two products, Squashni and Squashni Micro, were devised to provide solutions for both conventional alarm sounder duties and the more rigorous demands of low power loop driven systems.
The Squashni has a choice of any one of the 28 tones listed on the back page of this data sheet. The tones are factory pre-set and must be specified at the time of ordering. A second tone is available and is selected via a third wire installed in the sounder circuit, as indicated in the diagram.
The standard Squashni will accommodate most common detectors, whilst a larger diameter variant is available for bigger devices.
The Squashni Micro has four tones, selectable on the unit, an ultra low current consumption and so is ideal for loop powered systems. The sound output level is switch selectable so the optimum performance can be set for each application.

Reduced Installation Costs

The Squashni itself provides excellent value for money, and also offers opportunities for further savings during installation.
By combining detector and sounder positions at a single point, a single four core cable can be used for detector and sounder circuits instead of two, separate two-cores, with consequent savings in time and cost.
Another benefit of the combined installation is the improved aesthetics and reduced number of installation points which are a prime consideration in prestige environments and historic buildings.

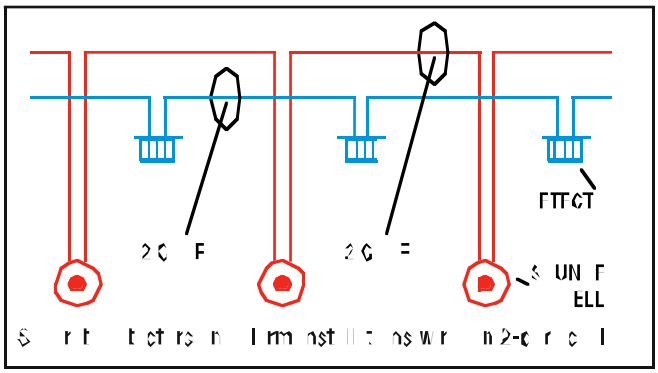

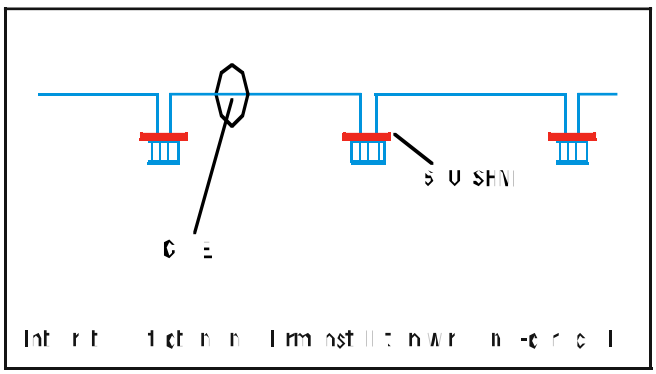



Squashni with fire detector





Squashni with cover

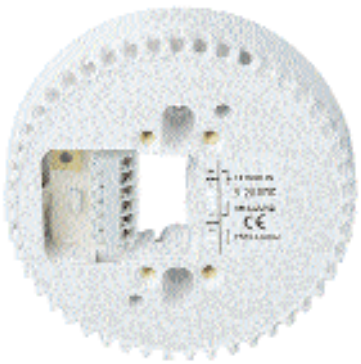

Squashni

Specifications

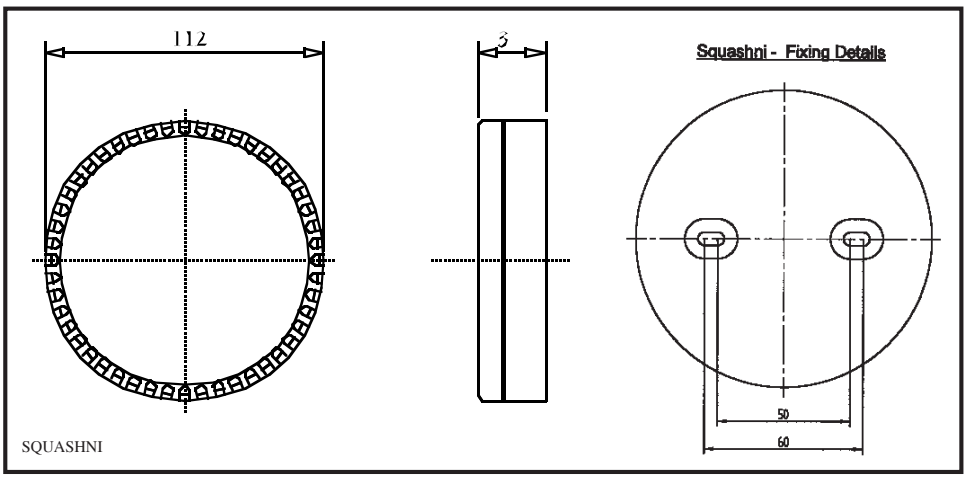

SQUASHNI

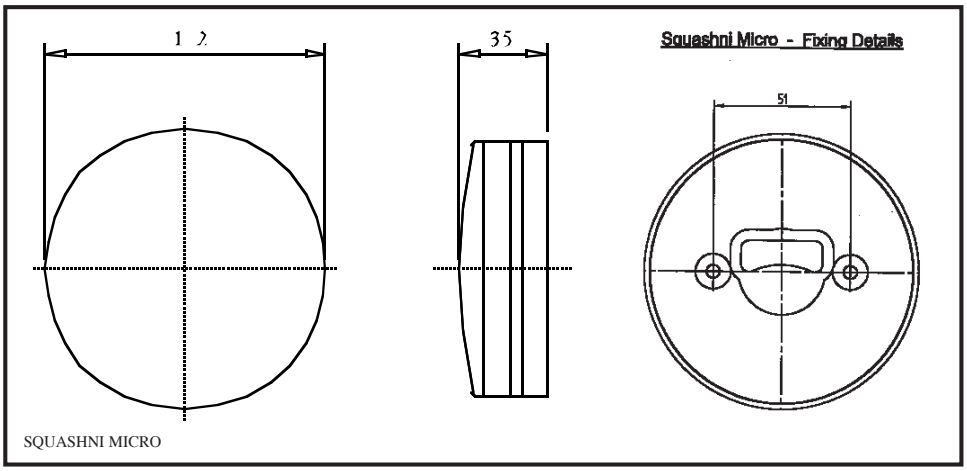

SQUASHNI MICRO


Xenon Beacon mounted on a Squashni


The large diameter Squashni

SPECIFICATION

Model	Squashni	Squashni Micro
Operation	Continuous	
Operating Voltage	10-28Vdc	9 - 30Vdc
Current	18mA tone 3	From 3mA
Starting Current	30mA for 2 milliseconds	30mA for 10ms
Starting Time	1.5ms	26ms
Sound Output	See table	See table
Tones	28 - See table	4-See table
Synchronisation	Synchronised start	Synchronised start
Operating Temperature	-40C to +80C	-25C to +85C
Line Monitoring	Reverse polarity	Reverse polarity
Construction	ABS Plastic	ABS Plastic
Colours	White, Red and to match leading detectors	
Ingress protection	IP54	IP42
Dimensions	112mm dia x 30mm deep	102mm dia x 25mm deep (35mm deep with cover)
Weight	0.15Kg	0,155Kg

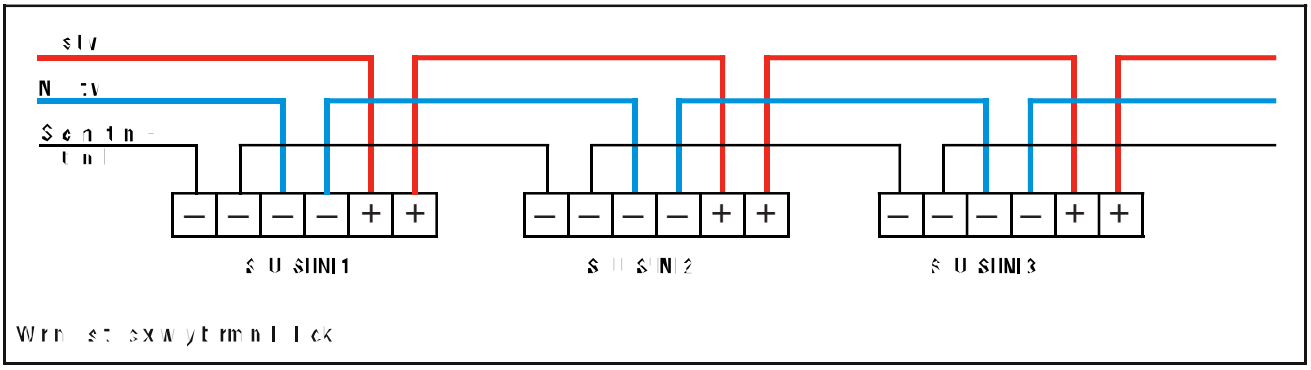

Output Table - SQUASHNI

No.	Tones	2nd Tone	Description	Typical current (average mA)		Typical Sound Output ±2dBA at 1m	
				12V	24V	12V	24V
1	Alternating Tones 800/970 at 2 Hz	14		10	18	87	93
2	Sweeping 800/970 Hz at 7 Hz	14	Fast Sweep (LF)	10	18	87	93
3	Sweeping 800/970 Hz at 1 Hz	14	Medium Sweep (LF)	10	18	87	93
4	Continuous at 2850 Hz	14		16	32	96	102
5	Sweeping 2400-2850 Hz at 7 Hz	4	Fast Sweep	18	30	97	102
6	Sweeping 2400-2850 Hz at 1 Hz	4		17	30	97	102
7	Slow Whoop	14	Slow Whoop	12	20	87	91
8	Sweep 1200-500 Hz at 1 Hz	14	Din Tone	9	16	87	91
9	Alternating Tones 2400/2850 2 Hz	4		19	30	95	101
10	Intermittent Tone of 970 Hz at 1Hz	14	Back-up Alarm (LF)	9	12	86	91
11	Alternating Tones 800/970 Hz at 1Hz	14		10	18	87	92
12	Intermittent Tone at 2850 Hz at 1Hz	4	Back-up Alarm (HF)	14	24	94	98
13	970 Hz at 1/4 sec. on 1 sec. off	14		5	8	82	87
14	Continuous at 970 Hz	14		11	20	87	92
15	554 for 100 ms and 440 Hz for 400ms	14	French Fire Sound	7	12	83	87
16	Intermittent 660 Hz 150ms On/150 ms Off	16	Swedish Alarm Tone	6	9	85	88
17	Intermittent 660 Hz 1.8s On/1.8s Off	17	Swedish Alarm Tone	7	12	87	92
18	Intermittent 660 Hz 6.5s On/13s Off	18	Swedish Alarm Tone	8	14	88	93
19	Continuous 660 Hz	19	Swedish Alarm Tone	8	14	88	93
20	Alternating 554/440 Hz at 1 Hz	20	Swedish Alarm Tone	7	13	84	90
21	Intermittent 660 Hz at 1 Hz	21	Swedish Alarm Tone	6	10	83	90
22	Intermittent 2850 Hz 150 ms On/100 ms Off	14	Pelican Crossing	13	22	92	98
23	Sweep 800-970 Hz at 50 Hz	14	Low Frequency Buzz	10	18	87	92
24	Sweep 2400-2850 Hz at 50 Hz	4	High Frequency Buzz	14	25	97	102
25	Intermittent 970Hz 500ms On/500ms Off	25	ISO 8201 Low Frequency	9	14	82	88
26	Intermittent 2850Hz 500ms On/500ms Off	26	ISO 8201 High Frequency	12	20	91	97
27	Continuous at 4kHz	27		18	35	90	98
28	Alternating tones 800/970 at 2Hz	10	FP1063.1	10	17	87	92

Output Table - SQUASHNI MICRO

	Low Current Mode		High Output Mode	
	Current ±1mA	Output ±2dB(A)	Current ±1.5mA	Output ±2dB(A)
Continuous Tone 510Hz	3mA	86dB(A)	9mA	95dB(A)
Two Tone 510/610Hz alt. at 2Hz	3mA	86dB(A)	9mA	95dB(A)
Intermittent Tone 510Hz at 1Hz	3mA	83dB(A)	10mA	95dB(A)
Sweeping Tone 800/970Hz at 1Hz	5.5mA	90dB(A)	15mA	97dB(A)

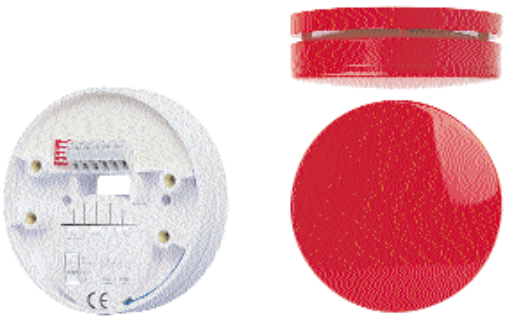

Squashni Micro

ORDERING CODES - SQUASHNI
SQ/_ _ / _

- **C** - Supplied with blank cover for use as a stand alone sounder
- **nn** - Tone number
- **SQ** - Squashni

EXAMPLE
SQ/03

Squashni / Tone 3

ORDERING CODES - SQUASHNI MICRO
SQM/_ _ / _

- **C** - Supplied with blank cover for use as a stand alone sounder
- **R or W** - Red or White or to match detector (name manufacturer)
- **SQM** - Squashni Micro

EXAMPLE
SQM/W/C

Squashni Micro / White / with cover

ISSUE 1/00

We reserve the right to change, without prior notice, the specification of these products from that detailed.
Data shown is typical for operation under normal ambient conditions.

FULLEON LTD
Llantarnam Park, Cwmbran, Gwent NP44 3AW.
Tel: +44 (0) 1633 872131 Fax: +44 (0) 1633 866346
E-mail: sales@fulleon.co.uk URL: http://www.fulleon.co.uk