PN7297

Pressure sensor with display

PN-001BREN14-QFRKG/US/ /V

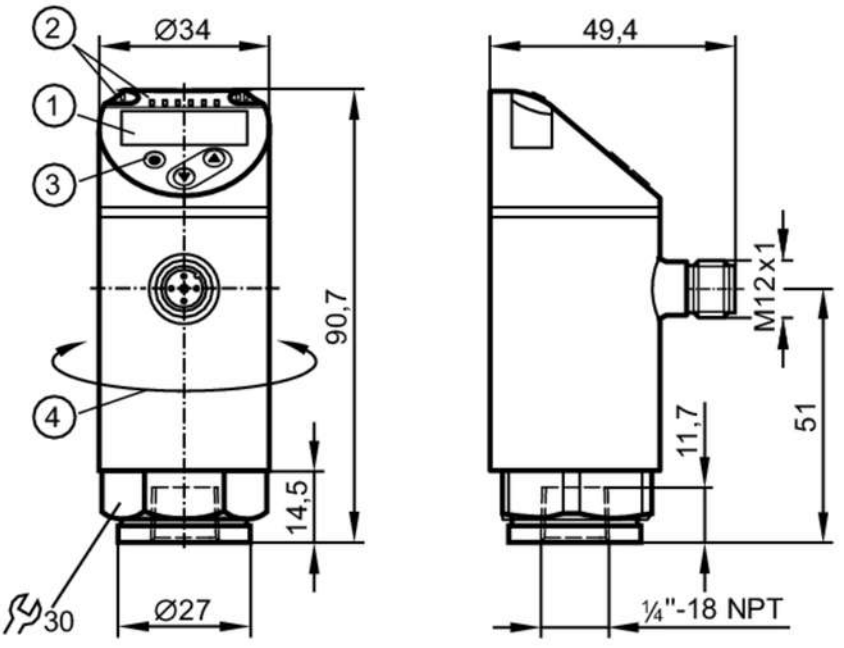

1 alphanumeric display 4-digit red/green
2 LEDs Display unit / switching status
3 programming button
4 upper part of the housing can be rotated 345°

Product characteristics					
Number of inputs and outputs	Number of digital outputs: 2				
Measuring range	0...1 bar	0...1000 mbar	0...14.5 psi	0...29.5 inHg	0...100 kPa
Process connection	threaded connection 1/4" NPT internal thread				
Application					
Special feature	Gold-plated contacts				
Measuring element	ceramic-capacitive pressure measuring cell				
Application	for industrial applications				
Media	liquids and gases				
Medium temperature [°C]	-25...80				
Min. bursting pressure	30000 mbar	450 psi	880 inHg	3000 kPa	
Pressure rating	10000 mbar	145 psi	290 inHg	1000 kPa	
Type of pressure	relative pressure				
MAWP (for applications according to CRN)	10 bar	10000 mbar	145 psi	290 inHg	1000 kPa
Electrical data					
Operating voltage [V]	18...30 DC; (to SELV/PELV)				
Current consumption [mA]	< 35				
Min. insulation resistance [MΩ]	100; (500 V DC)				
Protection class	III				
Reverse polarity protection	yes				

PN7297

Pressure sensor with display

PN-001BREN14-QFRKG/US/ /V

Power-on delay time	[s]	< 0.3				
Integrated watchdog		yes				
Inputs / outputs						
Number of inputs and outputs		Number of digital outputs: 2				
Outputs						
Total number of outputs		2				
Output signal		switching signal; IO-Link; (configurable)				
Electrical design		PNP/NPN				
Number of digital outputs		2				
Output function		normally open / normally closed; (parameterisable)				
Max. voltage drop switching output DC	[V]	2.5				
Permanent current rating of switching output DC	[mA]	150; (200 (...60 °C) 250 (...40 °C))				
Switching frequency DC	[Hz]	< 170				
Short-circuit protection		yes				
Type of short-circuit protection		pulsed				
Overload protection		yes				
Measuring/setting range						
Measuring range		0...1 bar	0...1000 mbar	0...14.5 psi	0...29.5 inHg	0...100 kPa
Factory setting / CMPT = 2						
Set point SP		10...1000 mbar	0.1...14.5 psi	0.2...29.5 inHg	1...100 kPa	
Reset point rP		5...995 mbar	0.05...14.45 psi	0.1...29.4 inHg	0.5...99.5 kPa	
Min. difference between SP and rP		5 mbar	0.1 psi	0.2 inHg	0.5 kPa	
In steps of		5 mbar	0.05 psi	0.1 inHg	0.5 kPa	
Status_B High Resolution / CMPT = 3						
Set point SP		8...1000 mbar	0.12...14.5 psi	0.2...29.5 inHg	0.8...100 kPa	
Reset point rP		3...995 mbar	0.05...14.43 psi	0.1...29.4 inHg	0.3...99.5 kPa	
Min. difference between SP and rP		5 mbar	0.08 psi	0.2 inHg	0.5 kPa	
In steps of		1 mbar	0.01 psi	0.1 inHg	0.1 kPa	
Accuracy / deviations						
Switch point accuracy	[% of the span]	< ± 0,5				
Repeatability	[% of the span]	< ± 0,1; (with temperature fluctuations < 10 K)				
Characteristics deviation	[% of the span]	< ± 0,25 (BFSL) / < ± 0,5 (LS); (BFSL = Best Fit Straight Line; LS = limit value setting)				
Hysteresis deviation	[% of the span]	< ± 0,25				
Long-term stability	[% of the span]	< ± 0,05; (per 6 months)				
Temperature coefficient zero point	[% of the span / 10 K]	< ± 0,2; (-0...80 °C)				
Temperature coefficient span		< ± 0,2; (-0...80 °C)				

PN7297

Pressure sensor with display

PN-001BREN14-QFRKG/US/ /V

[% of the span / 10 K]			
Response times			
Response time	[ms]	< 3	
Delay time programmable dS, dr	[s]	0...50	
Software / programming			
Parameter setting options		hysteresis / window; normally open / normally closed; switching logic; switch-on/switch-off delay; Damping; Display unit	
Interfaces			
Communication interface		IO-Link	
Transmission type		COM2 (38,4 kBaud)	
IO-Link revision		1.1	
SDCI standard		IEC 61131-9	
SIO mode		yes	
Required master port type		A; (when pin 2 not connected: B)	
Supported DeviceIDs		**Type of operation**	**DeviceID**
		Factory setting / CMPT = 2	456
		Status_B High Resolution / CMPT = 3	635
Note		For further information please see the IODD PDF file under "Downloads"	
Factory setting / CMPT = 2			
Profiles		Smart Sensor: Process Data Variable; Device Identification, Device Diagnosis	
Min. process cycle time	[ms]	2.3	
IO-Link resolution pressure		1 mbar	0.001 MPa
IO-Link process data (cyclical)		**function**	**bit length**
		pressure	14
		binary switching information	2
IO-Link functions (acyclical)		application specific tag	
Status_B High Resolution / CMPT = 3			
Profiles		Smart Sensor ED2: Digital Measuring Sensor (0x000A), Identification and Diagnosis (0x4000)	
Min. process cycle time	[ms]	3	
IO-Link resolution pressure		0.5 mbar	0.0005 MPa
IO-Link process data (cyclical)		**function**	**bit length**
		pressure	16
		device status	4
		binary switching information	2
IO-Link functions (acyclical)		application specific tag	
Operating conditions			
Ambient temperature	[°C]	-25...80	
Storage temperature	[°C]	-40...100	
Protection		IP 65; IP 67	
Tests / approvals			
EMC		DIN EN 61000-6-2	
		DIN EN 61000-6-3	
Shock resistance		DIN EN 60068-2-27	50 g (11 ms)
Vibration resistance		DIN EN 60068-2-6	20 g (10...2000 Hz)

PN7297

Pressure sensor with display

PN-001BREN14-QFRKG/US/ /V

MTTF	[years]	260	
UL approval		UL Approval no.	J001
Pressure Equipment Directive		Sound engineering practice; can be used for group 2 fluids; group 1 fluids on request	

Mechanical data

Weight	[g]	221.5
Housing		cylindrical
Dimensions	[mm]	Ø 34 / L = 90.7
Materials		stainless steel (316L/1.4404); PBT+PC-GF30; PBT-GF20; PC
Materials (wetted parts)		stainless steel (316L/1.4404); ceramics; FKM
Min. pressure cycles		100 million
Tightening torque	[Nm]	2...3 turns after hand-fastening; recommended tightening torque; depends on lubrication, seal and pressure rating
Process connection		threaded connection 1/4" NPT internal thread
Restrictor element integrated		no (can be retrofitted)

Displays / operating elements

Display	Display unit	4 x LED, green (mbar, psi, kPa, inHg)
	switching status	2 x LED, yellow
	measured values	alphanumeric display, red/green 4-digit

Remarks

Pack quantity	1 pcs.

Electrical connection

Connector: 1 x M12; coding: A; Contacts: gold-plated

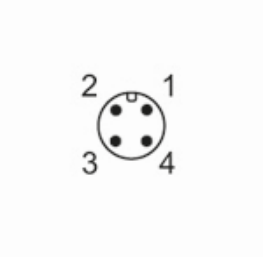

PN7297

Pressure sensor with display

PN-001BREN14-QFRKG/US/ /V

Connection

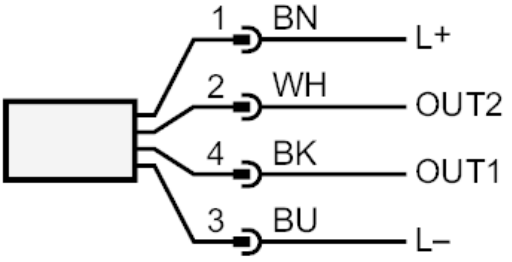

OUT1	switching output IO-Link
OUT2	switching output
	colours to DIN EN 60947-5-2
	Core colours :
BK =	black
BN =	brown
BU =	blue
WH =	white