N 312 ECP

Popular item
SKF Explorer

Dimensions

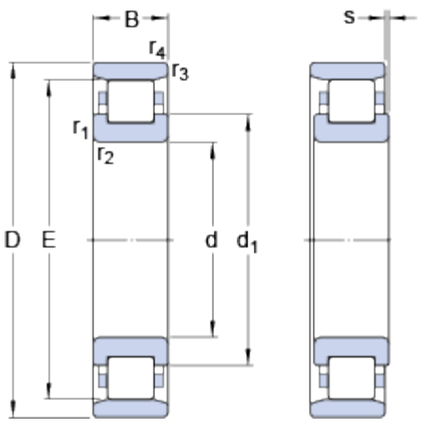

d		60	mm
D		130	mm
B		31	mm
d_1	≈	84.3	mm
E		115	mm
$r_{1,2}$	min.	2.1	mm
$r_{3,4}$	min.	2.1	mm
s	max.	2.1	mm

Abutment dimensions

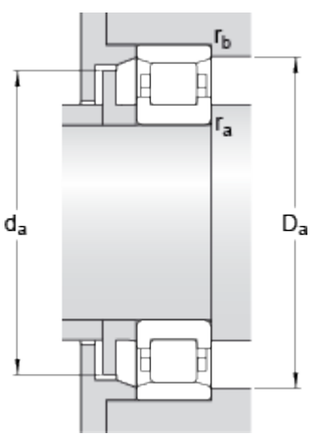

d_a	min.	72	mm
d_a	max.	113	mm
D_a	min.	118	mm
D_a	max.	119	mm
r_a	max.	2	mm
r_b	max.	2	mm

Calculation data

Basic dynamic load rating	C	173	kN
Basic static load rating	C_0	160	kN
Fatigue load limit	P_u	21.2	kN
Reference speed		5600	r/min
Limiting speed		6700	r/min
Calculation factor	k_r	0.12	
Limiting value	e	0.2	
Axial load factor	Y	0.6	

Mass

Mass bearing	1.76	kg