Y-bearing short base plummer block units

SYFWK 30 LTHR

Housing material	Composite for food and b everage

Dimensions

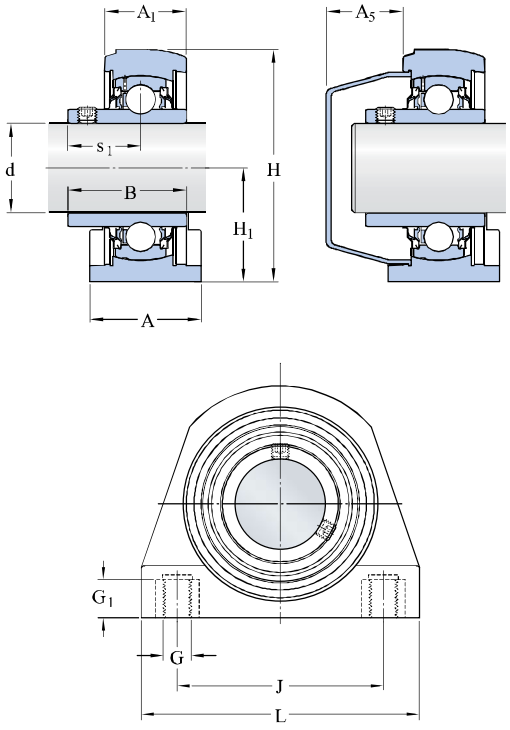

d	30	mm
A	43	mm
A_1	28	mm
A_5	27	mm
B	38.1	mm
H	84	mm
H_1	42.9	mm
J	76.2	mm
L	101	mm
s_1	22.2	mm

Calculation data

Basic dynamic load rating	C	16.3	kN
Basic static load rating	C_0	11.2	kN
Fatigue load limit	P_u	0.47	kN
Limiting speed		3800	r/min
(with shaft tolerance h6)			

Mass

Mass bearing unit		0.52	kg

Mounting information

Thread size attachement end	G	M10	
Thread length	G_1	12	mm
Hexagonal key size for grub screw	N	3	mm
Recommended tightening torque for grub screw		4	N·m

□□□ertaining □roducts

Housing	□□F□ □ 506 L
Bearing	□AR 206□2RFGR/H□

□□□ro□riate □roducts

□nd cover	□CL 206