LUCERNE PLUS™ CLEAR FRAME - CLEAR HC LENS

ONE PIECE HARD COATED LENS AND SHAPED SIDE ARMS FOR FITTING OVER PRESCRIPTION EYEWEAR

TECHNICAL SPECIFICATION

EYE & FACE PROTECTION

INSTRUCTIONS FOR USE

In use ensure that the spectacles fit comfortably and securely on the head

Ensure that the spectacles are in place, before entering the hazard area



FRAME: Polycarbonate

LENS: Polycarbonate

PERFORMANCE

Lens offers protection against low energy high speed particles at 45 m/s (101 mph)

The optical qualities of the lens comply with the requirements of optical class 1 (highest)



CLEANING & MAINTENANCE

The spectacles may be cleaned with soap and warm water and dried with a soft cloth

Do not clean with chemical or abrasive cleaners

The spectacles should be stored out of direct sunlight, away from chemicals and not exposed to extremes of temperature

CONFORMITY

Conforms to BS EN 166

CE 23162537 issued by INSPEC

LUCERNE PLUS™ CLEAR FRAME - CLEAR HC LENS

ONE PIECE HARD COATED LENS AND SHAPED SIDE ARMS FOR FITTING OVER PRESCRIPTION EYEWEAR

TECHNICAL SPECIFICATION

EYE & FACE PROTECTION

DIMENSIONS OF ITEM WHEN PACKED

Weight: 61g (approx.)

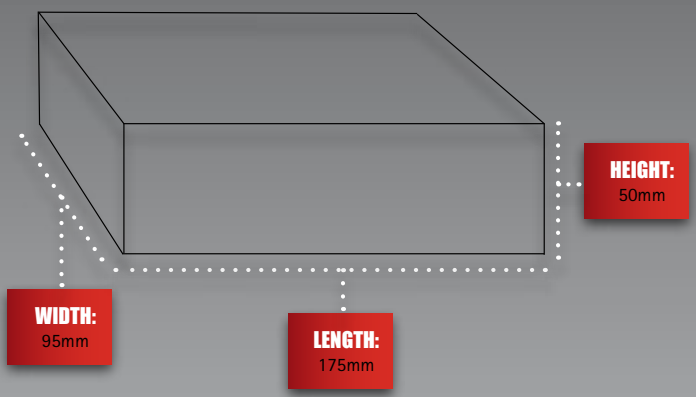



DIMENSIONS OF SPECTACLE

Overall Width: 70mm

Overall Length: 171mm

Overall Height: 50mm

Weight: 53g (approx.)

DIMENSIONS OF OUTER PACKAGING

Quantity: 150

Weight: 9.9Kg (approx.)

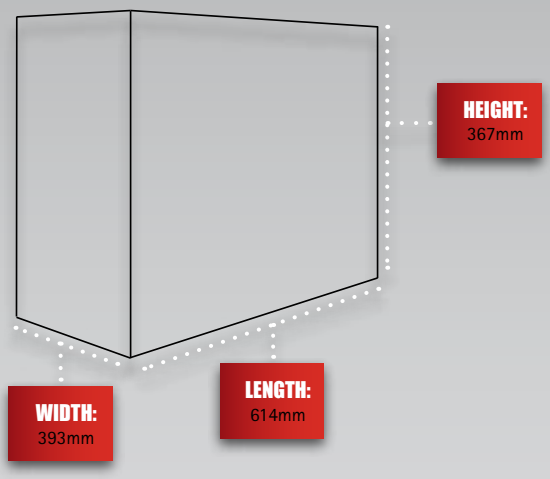

LIMITATIONS OF USE

Protection will only be offered if the spectacles are fitted correctly

If the spectacles become scratched or damaged they should be replaced, likewise if the spectacles are subjected to severe impact they should be replaced immediately

Do not apply paint, solvents, adhesives or self-adhesive labels, except in accordance with instructions from the manufacturer

The spectacles, when in contact with the skin may cause allergic reactions to susceptible individuals

If this occurs leave the hazard area, remove the spectacles and seek medical advice

The attention of users is also drawn to the dangers of modifying or removing any of the original component parts, other than as recommended by the manufacturer

The Lucerne Plus™ spectacles are not suitable for protection against dusts, liquids or molten metals

MARKINGS

Frame: EN166 F

Lens: EN166 EN170 2C-1.2 1.FK