Electronic controller
for cold rooms

CAREL

MasterCella



Technology & Evolution

MasterCella: the evolution of a success!







MasterCella

MasterCella represents one of the leading products in the CAREL refrigeration range.

Following the experience acquired over recent years, the product has been completely upgraded and proposed with a more modern appearance that better responds to customer expectations.

This new model is the response to the need for an integrated and complete solution for single-phase, static or ventilated cold rooms. The device directly manages single-phase units with up to 2 HP compressors; the powerful relays fitted also control all the other actuators: evaporator fans, defrost, lights and alarm relay. The high index of protection – IP65 – means that **MasterCella** can also be installed in humid environments. The case can be installed directly on the wall on the front of the cold room, while wiring is made simple by the significant space available inside, inserting the wires either from below or above.

MasterCella manages smart defrosts, consequently ensuring energy savings in the system as a whole, and can be fitted with a clock for real time defrosts (rather than at set intervals, as is usually the case). In the models fitted with clock, HACCP management is standard: this guarantees control over the temperature of stored foodstuffs, in compliance with the requirements of the HACCP system.

MasterCella: complete integration!



Easy to use

MasterCella comes with a very powerful display that shows 3 digits plus decimal point, minus sign and icons that make the values and operating status simple to read; the keypad is ergonomic and easy to use.

Made-to-measure for each customer

The appearance can be customised by simply replacing the top and bottom covers, adding specific colours or company logos.

HACCP: special surveillance

MasterCella automatically manages the monitoring of the unit, highlighting any critical situations. The **MasterCella** series simplifies the HACCP procedures by notifying the user of the correct temperature trend, activating a local alarm (buzzer) and remote alarm (via the special relay) when the maximum set limit is exceeded.

Comply With
HACCP
93/43/EU

Greater safety

Models are available with the 32 A door interlock disconnect switch option for complete unit on/off management. This solution makes the **MasterCella** a complete electrical panel. The disconnect switch can be locked in the "OFF" position to ensure maximum safety when carrying out maintenance on the cold room.



Cable inlet from below or above

The electrical cables can run to the instrument through standard plastic conduits that are fastened directly to the case.

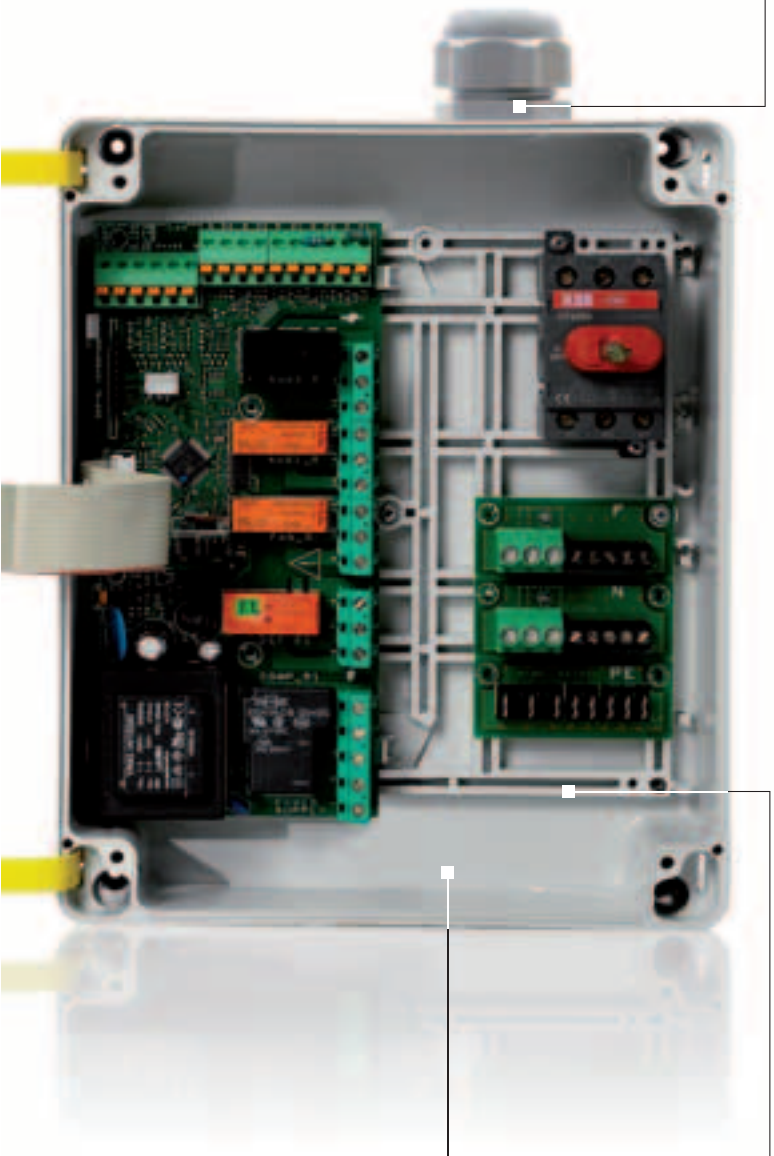

Easy to connect

Electrical wiring is made easy by the openable cover at the front and the considerable space inside to house the main switch or other auxiliary devices.

Control of large compressors and lights

Most of the models come with a 16 A / 2 HP relay, which can directly control heavy loads such as refrigeration compressors or actuators for managing the lights, including fluorescent lights, without the need for further intermediate relays.



Time-based defrost

The clock is used to record data in a detailed and precise way, and set the defrost function based on the real time (and not in intervals, as is usually the case). The RTC clock also ensures conformity with the HACCP standards, and its operation is guaranteed for at least 10 years.



Everything under control

The standard **MasterCella** supply includes 3 digital inputs, which can also be configured as NTC probe inputs, and ensure the following functions:

- monitor a third point of temperature measurement (this can be displayed on the repeater display);
- manage the "end defrost" completely and independently, by configuring additional parameters;
- manage the condenser fans using the auxiliary output;
- signal the high temperature alarms and the need for maintenance on the unit.

Removable bottom plate

The bottom plate that houses the power board and the control devices and/or accessories can be easily removed. This allows the panel to be wired before installation, and the holes to be made in the case for inserting the cables.

Accessories

MasterCella

Parameter programming

MasterCella is easy to program, reducing the risk of errors using the special programming key.
This accessory optimises the management of product codes, and can be used to carry out technical service quickly and effectively, as well as program the instrument in just a few seconds, including during the testing phase at end of the production line.



RS485 serial connection

MasterCella can be connected to a supervisory system via an RS485 network, using the special serial board; in addition, a specific model of board is available for connecting the repeater display directly to 10 pt.



Terminals

This accessory is used to group together the neutral, live and earth connections on one single board installed inside **MasterCella**. There are two models available: with 3 and 5 rows of terminals. The second, in particular, is used for direct access to the board with the load cables (live, neutral and earth), thus avoiding having to make the connections to the **MasterCella** auxiliary terminal block during installation.



Programming kit

This is used to interface the IROPZKEY* and PSOPZKEY* programming keys with any PC; this useful tool can be used to program the key with the standard instrument parameters, saving different configurations on files that can be recalled when performing the final programming. **MasterCella** can save until up to 6 different parameter configurations; this makes the instrument extremely flexible and allows rapid configuration based on the application.



Display terminal

A display can be connected in parallel with the interface to read and control the values measured by a dedicated probe.



Remote control

On the models fitted with infrared receiver, the main functions and configuration parameters can be accessed directly with the remote control; this can also be used to program **MasterCella** using a set of buttons that precisely reproduces the instrument keypad.



Models		MD33A0EN00	MD33A2ER00	MD33A5ER00	MD33D0EN00	MD33D0EB00	MD33D2EN00	MD33D5EN00	MD33D5EB00
outputs	compressor	16 A	30 A	30 A	16 A	16 A	30 A	30 A	30 A
	defrost	-	-	-	16 A	16 A	16 A	16 A	16 A
	expansion fan	-	-	-	8 A	8 A	8 A	8 A	8 A
	aux1	8 A	8 A	8 A	8 A	8 A	8 A	8 A	8 A
	light/aux2	16 A	16 A	2 Hp	16 A	16 A	16 A	2 Hp	2 Hp
inputs	room temperature	•	•	•	•	•	•	•	•
	defrost temperature	•	•	•	•	•	•	•	•
	digital input/probe 3	•	•	•	•	•	•	•	•
	digital input/probe 4	•	•	•	•	•	•	•	•
	digital input/probe 5	•	•	•	•	•	•	•	•
pluses	HACCP	-	-	-	-	•	-	-	•
	programming key	•	•	•	•	•	•	•	•
	high efficiency display	•	•	•	•	•	•	•	•
	buzzer	•	•	•	•	•	•	•	•
	infrared	-	•	•	-	•	-	-	•
	real time clock	-	-	-	-	•	-	-	•
	optional “hot point” display terminal	•	•	•	•	•	•	•	•
	optional RS485 board	•	•	•	•	•	•	•	•

Models with disconnect switch		MD33D0FB00	MD33D5FB00
outputs	compressor	16 A	30 A
	defrost	16 A	16 A
	expansion fan	8 A	8 A
	aux1	8 A	8 A
	light/aux2	16 A	2 HP
inputs	room temperature	•	•
	defrost temperature	•	•
	digital input/probe 3	•	•
	digital input/probe 4	•	•
	digital input/probe 5	•	•
plus	HACCP	•	•
	programming key	•	•
	high efficiency display	•	•
	buzzer	•	•
	infrared	•	•
	real time clock	•	•
	optional “hot point” display terminal	•	•
	optional RS485 board	•	•

Options	
IROPZKEY00	programming key with battery
IROPZKEYA0	programming key with power supply
IROPZSEM10	RS485 serial board
IROPZSEM30	RS485 serial board and repeater display management
IRTRRES000	remote control
PSOPZPGR00	programming kit
MDOPZCA000	terminals for 3 groups of connections
MDOPZCB000	terminals for 5 groups of connections
IR00RR0000	red repeater display
IR00RG0000	green repeater display

Dimensions (mm) and assembly

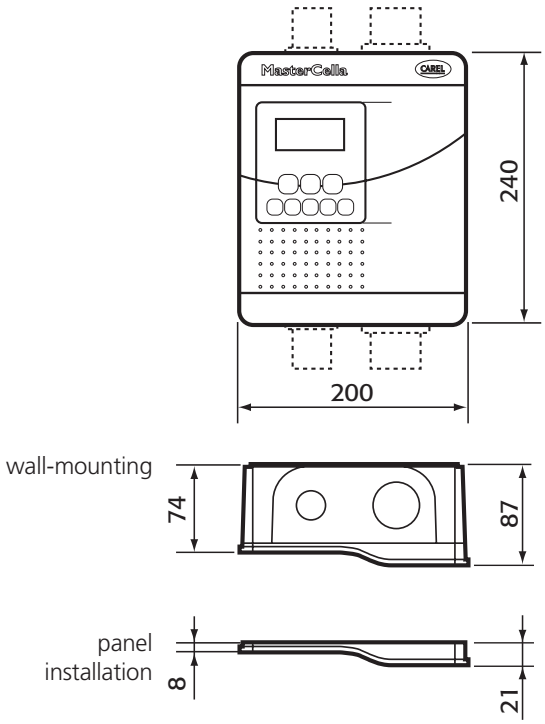

Connection diagram

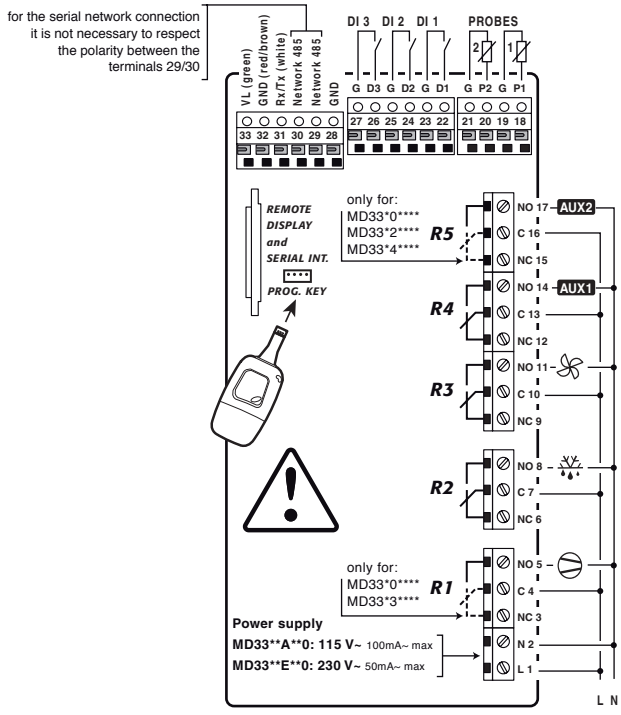

Headquarters

CAREL S.p.A.
Via dell'Industria, 11 - 35020 Brugine - Padova (Italy)
Tel. (+39) 0499 716611 - Fax (+39) 0499 716600
carel@carel.com - www.carel.com

+302238181 - 1.0 - 01.09.2006

Subsidiaries

CAREL Australia Pty Ltd
www.carel.com.au
sales@carel.com.au

CAREL China Ltd.
www.carelhk.com
info@carelhk.com

CAREL Deutschland GmbH
www.carel.de
info@carel.de

CAREL Export
www.carel.com
carelexport@carel.com

CAREL France Sas
www.carelfrance.fr
carelfrance@carelfrance.fr

CAREL Italia
www.carel.com
carelitalia@carel.com

CAREL Sud America Ltda.
www.carel.com.br
carelsudamerica@carel.com.br

CAREL U.K. Ltd.
www.careluk.co.uk
careluk@careluk.co.uk

CAREL USA L.L.C.
www.carelusa.com
sales@carelusa.com

Affiliated Companies:

CAREL Korea Co. Ltd.
www.carel.co.kr
info@carel.co.kr

CAREL (Thailand) Co. Ltd.
www.carel.co.th
info@carel.co.th

www.carel.com

All trademarks hereby referenced are
the property of their respective owners.
CAREL is a registered trademark of
CAREL S.p.A. in Italy and/or other countries.

© CAREL S.p.A. 2005 all rights reserved

CAREL reserves the right to modify the features
of its products without prior notice.