efector400

ROP520

INCREMENTAL ENCODER PERFORMANCE LINE

Encoders

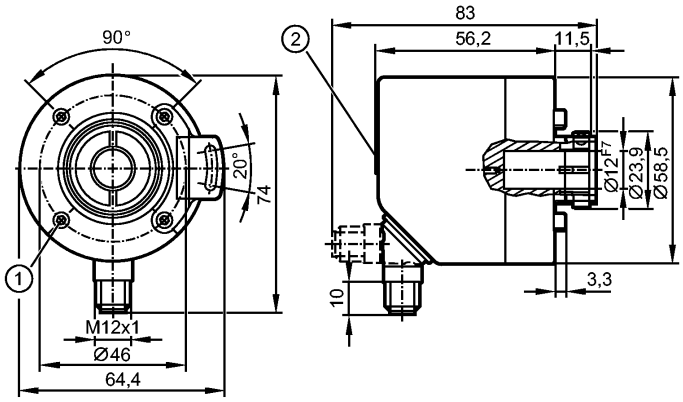

1: M3
2: display

CE IO-Link

Product characteristics
Hollow shaft encoder open to one side
HTL, TTL 50 mA
Connector
display
Magnetic detection system
Resolution 1...9999

Application	
Application	encoder - speed monitor - counter function

Electrical data		
Operating voltage	[V]	4.5...30 DC
Current consumption	[mA]	< 350
Max. permissible rpm / elec.	[1/min]	12000
Phase difference A und B	[°]	90
Switching frequency	[kHz]	1000
Reverse polarity protection		yes
Short-circuit protection		yes
Protection class		III
Pulse diagram		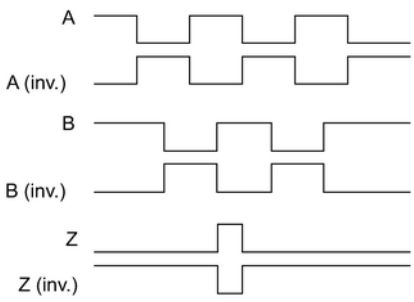

Direction of rotation clockwise (looking at the shaft)

Outputs	
Output function	HTL, TTL 50 mA

Measuring / setting range	
Encoders	
Resolution	programmable, factory setting 1024

ROP520

INCREMENTAL ENCODER PERFORMANCE LINE

Speed monitor			
Set point, SP		-9994...9999 [1/min]	-166.6...166.7 [Hz]
Reset point, rP		-9999...(SP-5) [1/min]	-166.7...(SP-0.1) [Hz]
Counter			
Preset point		1...9999	
Accuracy / deviations			
Accuracy		< 0.1°	
Software / programming			
Programming options		encoder: Resolution, rotational direction, HTL, TTL; Speed monitor; Resolution	
Interfaces			
IO-Link Device			
Transfer type		COM 2	
IO-Link revision		V1.1	
SIO mode		yes	
Min. process cycle time	[ms]	2.3	
Mechanical data			
Max. permissible rpm / mech.	[1/min]	12000	
Starting torque	[Ncm]	< 2 (20 °C)	
Shaft, material	[mm]	hollow shaft open to one side Ø 12, stainless steel	
Installation depth/shaft	[mm]	27	
Max. axial shaft alignment	[mm]	0.5	
Vibration resistance		30 g	
Shock resistance		200 g	
Housing materials		flange: aluminium; housing: stainless steel 444/1.4521; connector: stainless steel 316/1.4401; display window: PEI	
Weight	[kg]	0.475	
Environment			
Max. relative air humidity	[%]	95, Condensation not permissible	
Ambient temperature	[°C]	-40...85	
Storage temperature	[°C]	-40...85	
Protection		IP 65; IP 67 (housing); IP 64 (shaft)	
Tests / approvals			
MTTF	[Years]	218.3	
Displays / operating elements			
Display		4-digit 10-segment display red/green programmable 2 LEDs yellow 6 LEDs green (5 active)	
Electrical connection			
Connection		M12 connector; radial, can also be used axially; 8 pole	
Max. cable length	[m]	100	

Wiring

IO-Link:		preset counter:	
1:	L+	1:	UB
2:	not to be used	2:	IN1
3:	L-	3:	GND

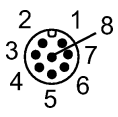

ROP520

INCREMENTAL ENCODER PERFORMANCE LINE

4:	IO-Link
5:	not to be used
6:	not to be used
7:	not to be used
8:	not to be used
screen:	plug

encoder:

1:	UB
2:	A
3:	GND
4:	Z/0-Pulse (90 deg)
5:	B
6:	A-
7:	B-
8:	Z-
screen:	plug

4:	not to be used
5:	OUT1
6:	not to be used
7:	not to be used
8:	not to be used
screen:	plug

Speed monitor:

1:	UB
2:	OUT2
3:	GND
4:	not to be used
5:	OUT1
6:	OUT2-
7:	OUT1-
8:	not to be used
screen:	plug

Remarks

Pack quantity	[piece]	1